rhTT1

E

SERVICE BOOK

rheavendors group

www.rheavendors.com

www.rheavendors.com tel: 0039 02 966 551 fax: 0039 02 96 55 086 email: rheavendors@rheavendors.com exclusive property of rheavendors group

preliminary safety information

before using the machine, carefully read this information that helps you behave properly and guarantees a safe use;
the following pages use the symbols listed here below, whose meaning is of attention:

GENERAL;
if the text is highlighted by this symbol, it is recommended to pay special attention to the performance of the procedures described; if not carefully performed on safe conditions, they can be source of general danger;

HIGH VOLTAGE;
if not properly performed, the actions marked by this symbol may expose to accidental contacts with electric voltage;

DANGEROUS TEMPERATURE;
if not properly performed, the actions marked by this symbol may expose to accidental contacts with high-temperature parts;

MOVING PARTS;
if not properly performed, the actions marked by this symbol may expose to accidental contacts with moving parts;

CRUSHING;
if not properly carried out, the actions marked by this symbol may expose to a risk of crushing;

the same symbols are placed inside the vending machine to indicate the parts on which to act with the utmost caution;

SERVICE KEY IN USE;
the symbol recommends the utmost attention during the actions described; the use of the service key intended to activate all machine functions when the door is open is only reserved to the technical operators who know the operation of the vending machine, who are aware of potential risks and who make sure they are operating on totally safe conditions;
the use of the service key shall be strictly limited to the time necessary to perform the actions requiring the use thereof; users shall be informed of the prohibition on using and approaching the vending machine;

WEIGHT:
the symbol reminds the user to consider the machine weight carefully for handling and placing it definitively.

WATER SUPPLY;
it marks the parts duly requiring caution in case of leakage, if connected with the hydraulic network;

SUPPORT SURFACE;
it reminds the user to install the machine on a support surface, the max. inclination of which is 2°;

www.rheavendors.com tel: 0039 02 966 551 fax: 0039 02 96 55 086 email: rheavendors@rheavendors.com exclusive property of rheavendors group

safety rules for using the vending machine

*** pay special attention to the chapters and notes high lit by the symbols of alert; strictly observe the rules concerning, in particular, the operators' and users' safety;

*** the vending machine may be used by children who are at least 8 years old and by people having reduced physical, sensory or mental capacities or not having all necessary experience and knowledge, provided that they are under supervision or after they have received all necessary instructions for using the machine on safe conditions and for understanding the dangers related thereto; children must be supervised and prevented from playing with the vending machine;
cleaning and servicing shall not be carried out by children;

*** if you should find out a water leak or the presence of smoke, immediately detach the vending machine from the electric and hydraulic network, never try to restore its operation and apply to skilled technicians;

*** the machine shall be installed according to national rules; pay special attention to the rules about the machines directly connected with the hydraulic network;

*** room (during storage and operation):
temperature: 5 °C ÷ 35 °C
relative humidity: max 80 %

*** the inclination of the vending machine support surface shall not exceed 2°;

*** if the hydraulic connection tube is not supplied with the machine or in case of replacement, the connection must be carried out only with:

- new tube;
- of type-approved material for food use;
- compliant with "IEC 61770 Electric appliances connected to the water mains";
- it can support the working pressure;

*** the user is not allowed to access the maintaining and servicing area that shall be properly signalled;

*** never remove protections, never override safety devices and never modify the machine or its components;

*** tools necessary to act with this vending machine:
- a pair of scissors for electricians, a Phillips PH2 cross screwdriver for 4/6 mm self-threading screws, a set of wrenches up to 13 mm, a set of Allen wrenches from 2 to 8 mm;
- it may be of use to procure some expendables, such as disposable paper, single-use gloves, clean cloths, cups and a bucket for the collection of waste water;

*** never wash the machine by using water jets; the vending machine is not suitable for installation in areas where it can be reached by water jets;

*** for cleaning at regular intervals refer to Service Manual - chapter 12.;

www.rheavendors.com tel: 0039 02 966 551 fax: 0039 02 96 55 086 email: rheavendors@rheavendors.com exclusive property of rheavendors group

safety rules for using the vending machine

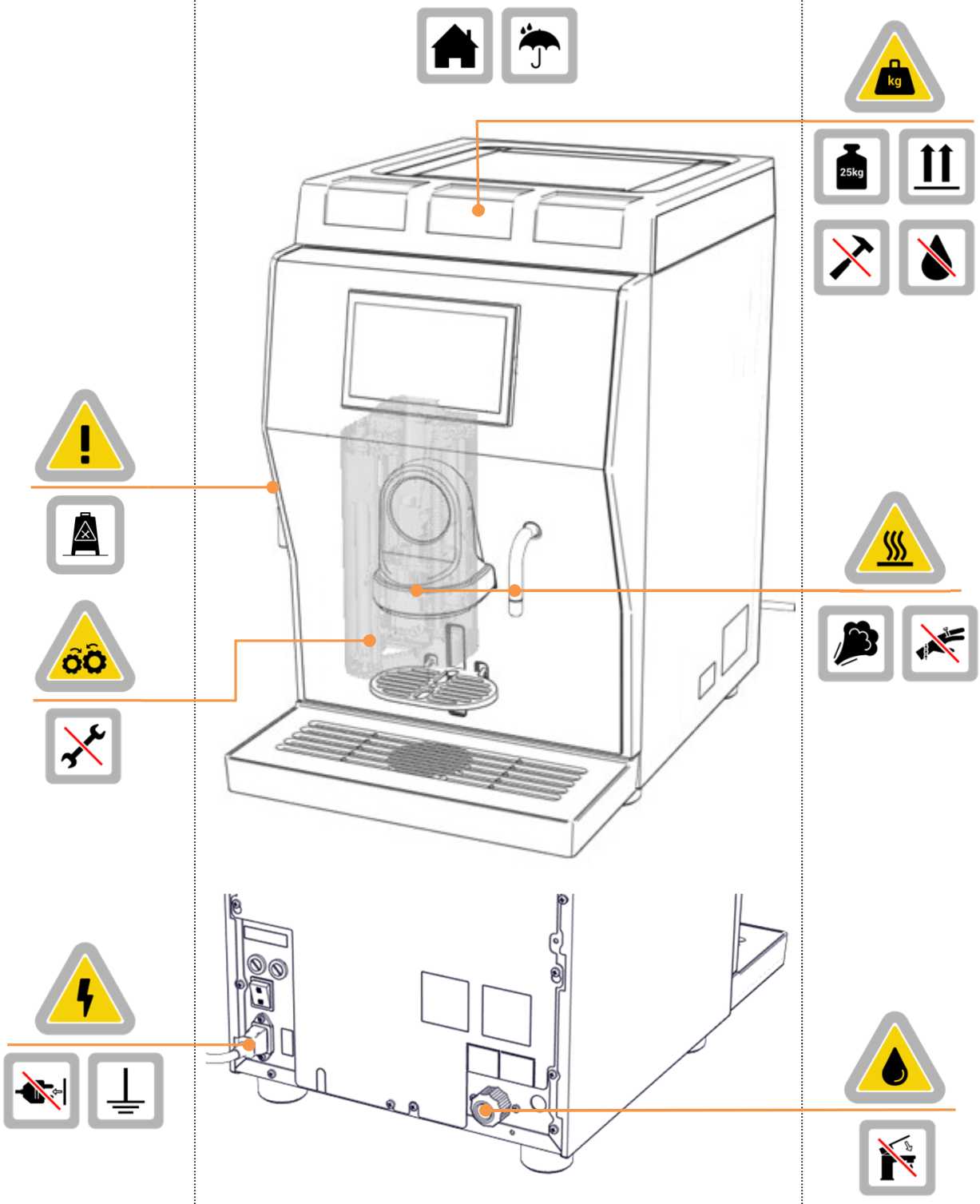

the symbol means that it is forbidden to dispose of the equipment as urban waste and compulsory to provide for separate collection in order to prevent any potential effect on the environment and human health; strictly follow the provisions of the European Parliament's 2012/19/EU Directive;

www.rheavendors.com tel: 0039 02 966 551 fax: 0039 02 96 55 086 email: rheavendors@rheavendors.com exclusive property of rheavendors group

residual risks

a residual risk is understood as a potential danger that can not be eliminated and it persists despite all precautions in use since it is related to the intrinsic features of the product and it also includes non-identifiable risks;
the actions and behaviours listed here below are intended to reduce residual risks and you shall always adopt them when interacting with the machine;

wear clothes that can properly avoid any accident (never wear rings, chains, clothes with laces or excessively long sleeves, ...);

carefully evaluate the treatment of residues from installation (wood, plastics, ...) and utilisation (product powder, bags, ...);

never repair or carry out any technical action if you have not been properly trained;

signal that a technical action is in progress on the machine (barriers against approach, signs, ...), carry it out quickly without leaving the station;

install the machine in a sheltered, illuminated, ventilated and noiseless environment; keep it clean and never place tools or any other object on it; never install it outdoors or, anyway, never expose it to atmospheric agents;

make sure it can be neither reached by water sprays or vapours nor hit by objects that might damage it;

carefully consider the machine weight and stability during the installation and in the final working position;

supply the machine within voltage, temperature, pressure and hydraulic limits, ... as it is detailed on the following pages and provide for an effective earthing;

even if detached from supply, the machine may contain hot pressurised water at a high temperature;

never detach hydraulic and electric supplies when they are active;

www.rheavendors.com tel: 0039 02 966 551 fax: 0039 02 96 55 086 email: rheavendors@rheavendors.com exclusive property of rheavendors group

general guarantee conditions

these conditions regulate Rheavendors Industries S.p.A.'s obligations with reference to guarantee and repair; any other term or condition, either verbal or written, is not applicable, including those in the purchaser's purchase orders, if not explicitly accepted and signed by Rheavendors Industries S.p.A.; if the guarantee terms here below should be held not to be valid and/or lawful in the Country where the product is sold, they will not be effective whereas all the other clauses will remain valid and applicable;

1st the mechanical and electronic components of the machine are guaranteed for twelve months, starting from the sales date certified by the fiscal receipt;

2nd the guarantee shall be understood as the free replacement or repair of any part of the machine that – at the manufacturer's unquestionable discretion – should prove to be originally defective due to manufacturing defects; the cost of sending the manufacturer machines, defective pieces and spare parts will be totally charged to the user's account; the manufacturer reserves the right to use new or reconditioned components for repair; if replaced, original components will be guaranteed for 12 months; the parts replaced under guarantee will become the property of Rheavendors Services S.p.A. (request for "Form PO 19.01/2b" Materials under guarantee – Authorisation to return);

3rd in case of irreparable failure or if a failure of the same origin is repeated, the manufacturer may – at its unquestionable discretion – replace the machine with another one, the model of which is either the same or an equivalent one; the guarantee of the new machine will be extended up to the original term of guarantee of the replaced machine;

4th all the parts that should prove to be defective due to negligence or carelessness (non-observance of the instructions for the operation of the machine), incorrect installation or maintenance by unauthorised personnel, transport damage or any circumstance – anyway – not due to the manufacturing defects of the machine are not covered by guarantee; the installation and connection with supply plants as well as the maintenance operations mentioned by the installation manual are also excluded from any performance under guarantee; the guarantee will not cover payment systems either; whether installed on the machine or supplied as an accessory, they are subject to their manufacturer's guarantee whereas Rheavendors Industries S.p.A. will just act as a broker;
all changes made to the machine and not agreed with the manufacturer in writing will involve the immediate termination of the guarantee period and anyway fall under the Customer's total responsibility;

5th the guarantee is excluded in all cases of improper use of the machine;

6th Rheavendors Industries S.p.A. will disclaim all responsibility for any damage that may be directly or indirectly caused to people, animals or things as a result of:
improper use of the vending machine; incorrect installation; improper energy or water supply; serious maintenance deficiency; actions or changes not explicitly authorised; use of non original spare parts;

7th in case of failure, Rheavendors Industries S.p.A. is obliged neither to compensate any economic damage due a forced stop of the machine nor to extend the guarantee period;
if the machine should be transferred to a centre designated by the manufacturer for overhaul or repair, the relative transportation risks and costs will be charged to the user's account. The freight charges of machines, defective pieces and spare parts are always understood as charged to the user's account;

www.rheavendors.com tel: 0039 02 966 551 fax: 0039 02 96 55 086 email: rheavendors@rheavendors.com exclusive property of rheavendors group

Preventive maintenance:

Preventive maintenance is performed periodically in order to reduce the incidence of equipment failure and the costs associated with it.
Ideally, preventive maintenance will take place just before failure occurs in order to maximize the time that equipment is in use between scheduled maintenance activities.

It is the preset check of the vending machines and all the replacements required to ensure the quality of products and to maintain the optimum performance of reliability of the vending machines series.

Scheduled PM (Preventive Maintenance) Program Overview:

the purpose of scheduled Preventive Maintenance is to avoid or reduce emergency service costs by implementing a standardized regular interval of Preventive Maintenance.
the bathtub curve is typically used as a visual model to illustrate the three key periods of product failure.

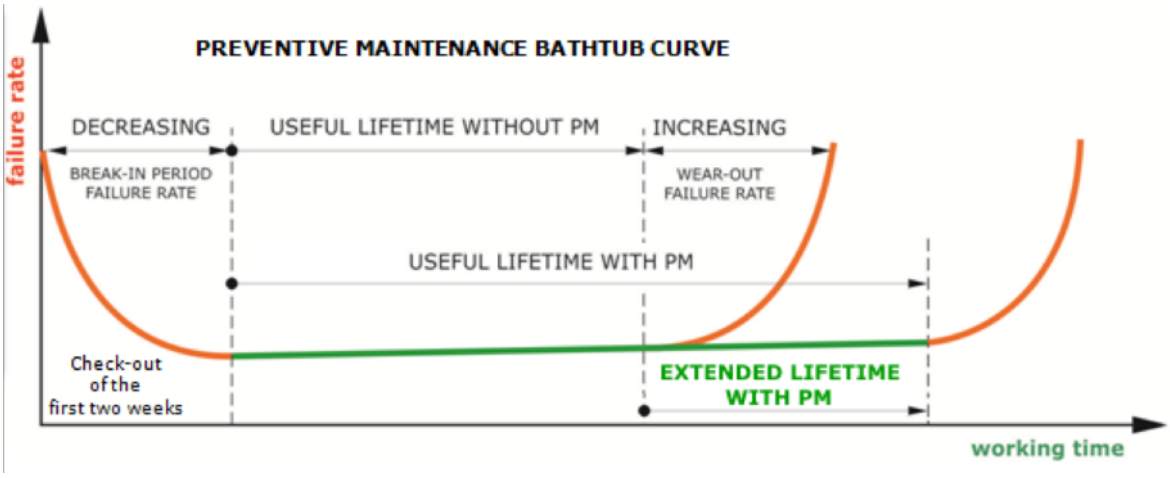

note: preventive maintenance increases the useful lifetime of the machine; the mean-time-to-failure (MTTF) or bathtub curve indicates that a new machine has higher probability of failure during the first two weeks of operations, usually caused by setting issues. Following this initial period, the probability of failure is low for an extended period of time.

After this normal machine life period, the probability of failure increases sharply with elapsed time of hours of operations. Preventive maintenance is based on replacing components after a certain length of time or amount of use to extend the operating life of machines.

The following pages summarizes the scheduled preventive maintenance suggested for Rhea Machines; the level of PM performed will be determined by cycle count accumulations or months since the first installation.

Use only official Rheavendors spare parts

CLEANING. Cleaning of the machine is mandatory for a correct maintenance of the machine. It must be considered as an active part of the preventive maintenance.

www.rheavendors.com tel: 0039 02 966 551 fax: 0039 02 96 55 086 email: rheavendors@rheavendors.com exclusive property of rheavendors group

Concept of "preventive maintenance"

The components and assembly parts included in the preventive maintenance kit for Rhea machines are conceived according to our experience and considering:

1. Use cases: the cycles required by Rheavendors refer to standard conditions of indoor use and can't be considered valid in case, for example, of use of the machines in particularly wet environments, hot or dusty location
2. Wear and tear of the components at distribution stage
3. Wear and tear of the components with time
4. Natural deterioration of materials due to the different work cycles (daily consumptions) inside the machines
5. Changes in the performances due to the raise of damaging elements for the components themselves, such as:
- scale (water filter is recommended)
- different consistency of the coffee beans
- remains of coffee inside the grinders for a long inactivity time
- cleaning of the machine
6. Sizing of the machines according to the number of consumptions per day
7. Observance of the easy cleaning procedure during each loading in the vending case
8. Observance of the deep cleaning and sanitization procedures of the machines, that allows to work under the existing sanitary-hygiene regulations.

Note that HACCP rules are not mentioned in this document. Please refer to the specific rules of your country.

In the light of the above, the preventive maintenance cycles are as follows:

A. Every 10.000 consumptions: 10k, 20k, 30k, 40k, 50k, 60k, 70k, 80k, 90k, 100k, 110k, 120k, 130k, 140k, 150k, 160k, 170k, 180k and so on
B. Every 30.000 consumptions: 30k, 60k, 90k, 120k, 150k, 180k and so on
C. Every 60.000 consumptions: 60k, 120k, 180k, and so on
D. Every 90.000 consumptions: 90k, 180k, and so on

Should any operational anomalies arise due to any events or circumstances not listed above, Rheavendors will be able to review and adjust the data according to such anomalies.

In case of machines with fewer consumptions, the preventive maintenance for some specific components MUST be done at least once a years. Refer to the following pages for more details.

Also**, long inactivity could create some troubles.** In that case it could be required to change the components that are effected by this problem (gaskets, silicon pipes, ...)

A deep cleaning of the machine will be also required, replacing the internal water and activating a sanitization process. This is required also to remove fouling and blocking due to lack of cleaning.

A cleaning of the grinder mills could be also required in order to remove residual of old coffee beans already grinded.

www.rheavendors.com tel: 0039 02 966 551 fax: 0039 02 96 55 086 email: rheavendors@rheavendors.com exclusive property of rheavendors group

Boiler descaling and replacing

Descaling and replacing the boiler or its elements is not directly related to the number of dispensing cycles. **Also if the machine is not dispensing**, the heating element is continuously activated to keep the water warm.

Descaling is related to the **water hardness** , that's why use of specific **filter** is always recommended.
In the market are available several substances for boiler descaling. Due to this, **is not possible to provide a specific rule about the descaling and replacing frequency.**

Generally speaking, descaling could be required 1-2 times in a year.

Considering that descaling can reduce the life of the boiler, expecially the heating element, we suggest to change the boiler after some descaling cycles. An average period for replacing can be defined in 3-5 years.

Grinder mills replacing

The amount of cycles for the PM that we suggest is considered with an average of 7 grams of coffee, coffee beans with standard hardness and standard granulometry setting. In case of different conditions, the frequency of the mills replacement can be different.

After the replacement a new pre grinding period must be considered.

www.rheavendors.com tel: 0039 02 966 551 fax: 0039 02 96 55 086 email: rheavendors@rheavendors.com exclusive property of rheavendors group

The following tools are required:
- Philips screwdrivers short and long
- Open-end wrenches 8, 10, 12 and 13 mm
- Silicone grease (GRS0000004)
- Pliers

Service maintenance A

Service maintenance A routine:
.. Visually inspect brewing-unit, clean brewing chamber
.. Exchange brewer parts and grease o-ring
.. Exchange mixers parts
.. Check beverage setting according to specifications or according to customer wish

Additionals controls:
.. Check eventually presence of scale on safety valve
.. At least **once a year** replace the silicon pipes
.. Exchange optional parts if required (fresh milk system or similar)
.. Check optional settings

Service maintenance B
The maintenance B will be considered in addition to the maintenance A, when required.

Service maintenance B routine:
.. Visually inspect brewing-unit, clean brewing chamber
.. Exchange brewer parts and grease o-ring
.. Exchange mixers parts
.. Exchange grinder parts
.. Exchange brewer PTFE pipe
.. Check beverage setting according to specifications or according to customer wish

Additionals controls:
.. Check eventually presence of scale on safety valve
.. At least **once a year** replace the silicon pipes
.. Exchange optional parts if required (fresh milk system or similar)
.. Check optional settings

www.rheavendors.com tel: 0039 02 966 551 fax: 0039 02 96 55 086 email: rheavendors@rheavendors.com exclusive property of rheavendors group

Service maintenance C

The maintenance C will be considered in addition to the maintenance A and B, when required.

Service maintenance C routine:

.. Visually inspect brewing-unit, clean brewing chamber
.. Exchange brewer parts and grease o-ring
.. Exchange mixers parts
.. Exchange fans
.. Exchange Varitherm parts (if installed)
.. Check boiler parts (exchange if required)
.. Check product container parts (exchange if required)
.. Exchange brewer PTFE pipe
.. Check beverage setting according to specifications or according to customer wish

Additionals controls:

.. Check eventually presence of scale on safety valve
.. At least **once a year** replace the silicon pipes
.. Exchange optional parts if required (fresh milk system or similar)
.. Check optional settings

Service maintenance D

The maintenance D will be considered in addition to the maintenance A, B and C, when required.

Service maintenance D routine:

.. Visually inspect brewing-unit, clean brewing chamber
.. Exchange brewer parts and grease o-ring
.. Exchange mixers parts
.. Exchange fans
.. Exchange hot water EV
.. Exchange boiler parts (if required)
.. Exchange grinder motor and specific parts
.. Exchange brewer gearbox motor parts
.. Exchange product container parts
.. Exchange brewer PTFE pipe
.. Check beverage setting according to specifications or according to customer wish

Additionals controls:

.. Check eventually presence of scale on safety valve
.. At least **once a year** replace the silicon pipes
.. Exchange optional parts if required (fresh milk system or similar)
.. Check optional settings

Critical

It's recommended to have these parts in stock for service. In case of out of order or damage, these parts will increase the possibility to repair the machine, reducing the out of order time.

www.rheavendors.com tel: 0039 02 966 551 fax: 0039 02 96 55 086 email: rheavendors@rheavendors.com exclusive property of rheavendors group

Legend

- Table: table title (grey background)
- Pos: position reference
- Code: part number
- Description: part description
- Critical: parts considered critical. These parts should be always in stock for service.
- Preventive maintenance:
  - A: first cycle of PM
  - B: second cycle of PM
  - C: third cycle of PM
  - D: forth cycle of PM
  - X = number of parts to be replaced during the PM. These numbers are calculated for each machine, considering the maximum configuration available. “xN” means that the number is variable, according to the machine configuration.
  - Y = parts to be replaced at least once a year
  - CK = check the part in order to verify if is required to clean it or replace it
  - § = assembly symbol.
- The single parts are in alternative to the recommended critical assembly components indicated with symbol §
- Recommended Spare Parts, considering the number of vending machines. Number of suggested part to have in stock for service. This number is not including the parts required for the preventive maintenance, but just for minimal stock.

The amount of parts required for the PM are calculated considering the maximum configuration of the machine model. Some detailed info about the machine configuration can be found in the machine code, following this conversion table:

Machine code structure:	**D**	**MMM**	**T**	**O**	**VV**	**I**	**M**	**CCC**
For example :	D	230	6	6	A0	4	2	376

MMM = Machine model

T = Machine Type

- 0 = Espresso - 1 = Instant - 6 = Induction Espresso

O = Optionals:

- 0 = Standard - 5 = Unplumbed version - 6 = Plumbed version

VV = Version Index:

A0 = ... A1 = ... To be specified by Rheavendors technical office

I = N° instant canisters (<u>not included the</u> coffee beans canisters):

1 = 1 canister .. 6 = 6 canisters

M = N° mixing bowls / mixers

1 = 1 mixing bowl/mixer .. 3 = 3 mixing bowls/mixers

CCC = Customer code, for example 376 = Romania

www.rheavendors.com tel: 0039 02 966 551 fax: 0039 02 96 55 086 email: rheavendors@rheavendors.com exclusive property of rheavendors group

cabinet

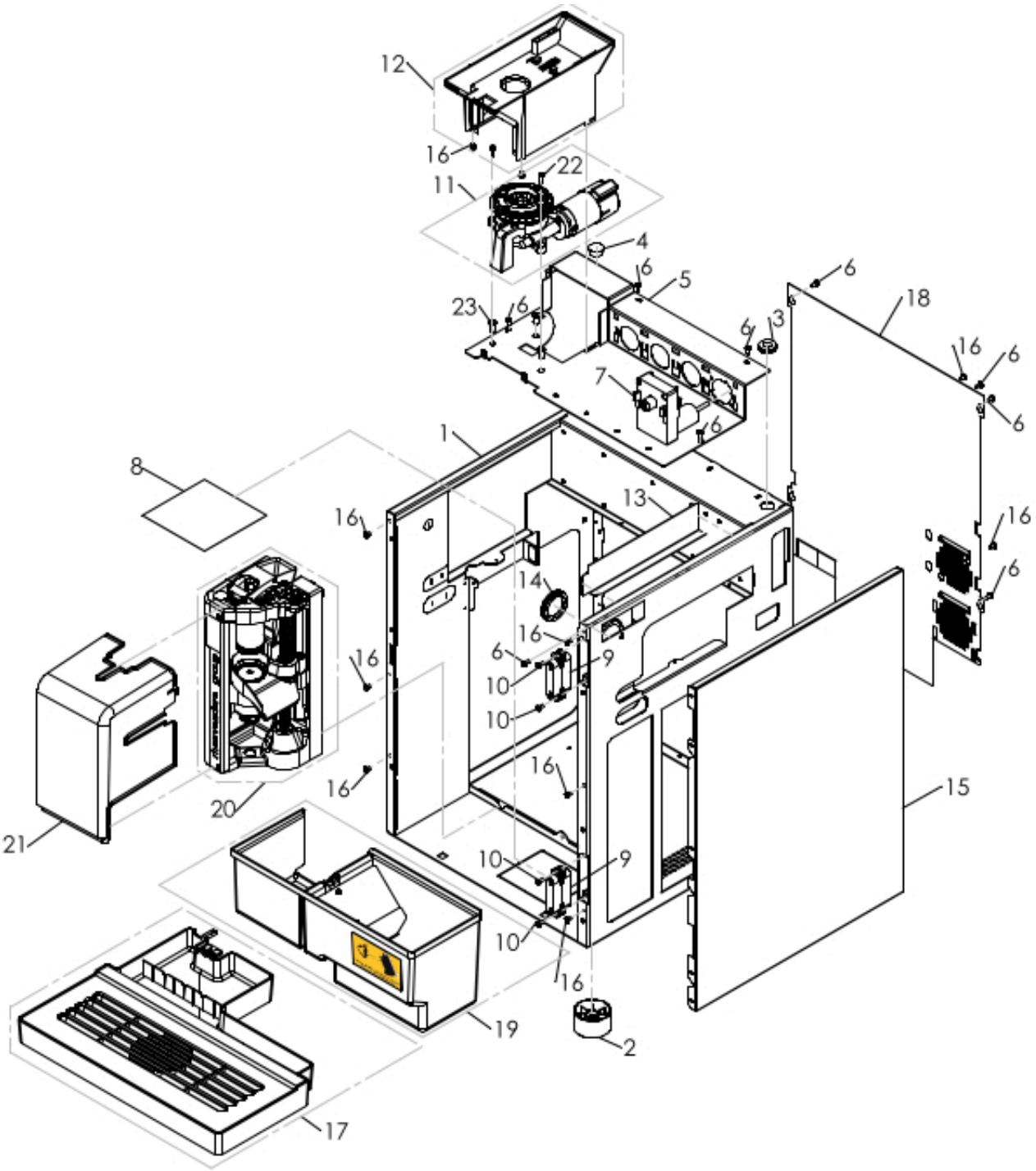

www.rheavendors.com tel: 0039 02 966 551 fax: 0039 02 96 55 086 email: rheavendors@rheavendors.com exclusive property of rheavendors group

cabinet							
				Preventive Maintenance			
Pos.	Code	Description	Critical	A	B	C	D
1	Z001B185005-05NA	CABINET					
2	Z001B185042CL	FOOT D50X29 1 piece					
3	H00025008	CABLE GROMMET					
4	GUA0011044	PLUG					
5	Z001B185021-01NA	GRINDER SUPPORT					
6	VIT0000011	SCREW HEAD TAP CAP M4X8					
7	Z0090002113R	MR NCJM2480-X 24VDC WITH BOARD	X				X
8	Z0010020413	GROUNDS STICKER					
9	Z002B185021	HINGE					
10	VIT0000107	SCREW COUNT FLAT HEAD M4X10					
11		See table GRINDER					
12		See table GRINDER COVER					
13	Z001B185065NA	WIRING SUPPORT					
14	GUA0010503	ELECTRICAL GROMMET DG 29					
15	Z001B185030NA	REMOVABLE CLOSURE					
16	VIT0000021	SCREW HEAD TAP CAP M4X6					
17		See table DRIP TRAY					
18	Z001B185035NA	REAR CLOSURE					
19		See table COFFEE GROUNDS CONTAINER					
20/a		See table PROFESSIONAL BREWER GROUP D.36					
20/b		See table PROFESSIONAL BREWER GROUP D.45					
21	Z025B185001NA	VARIFLEX GROUP PROTECTION					
22	VIT0000013	SCREW HEAD TAP CAP M4X12					
23	Z0320001628	NO-VIBRATION BUSH					

www.rheavendors.com tel: 0039 02 966 551 fax: 0039 02 96 55 086 email: rheavendors@rheavendors.com exclusive property of rheavendors group

UPPER COVER

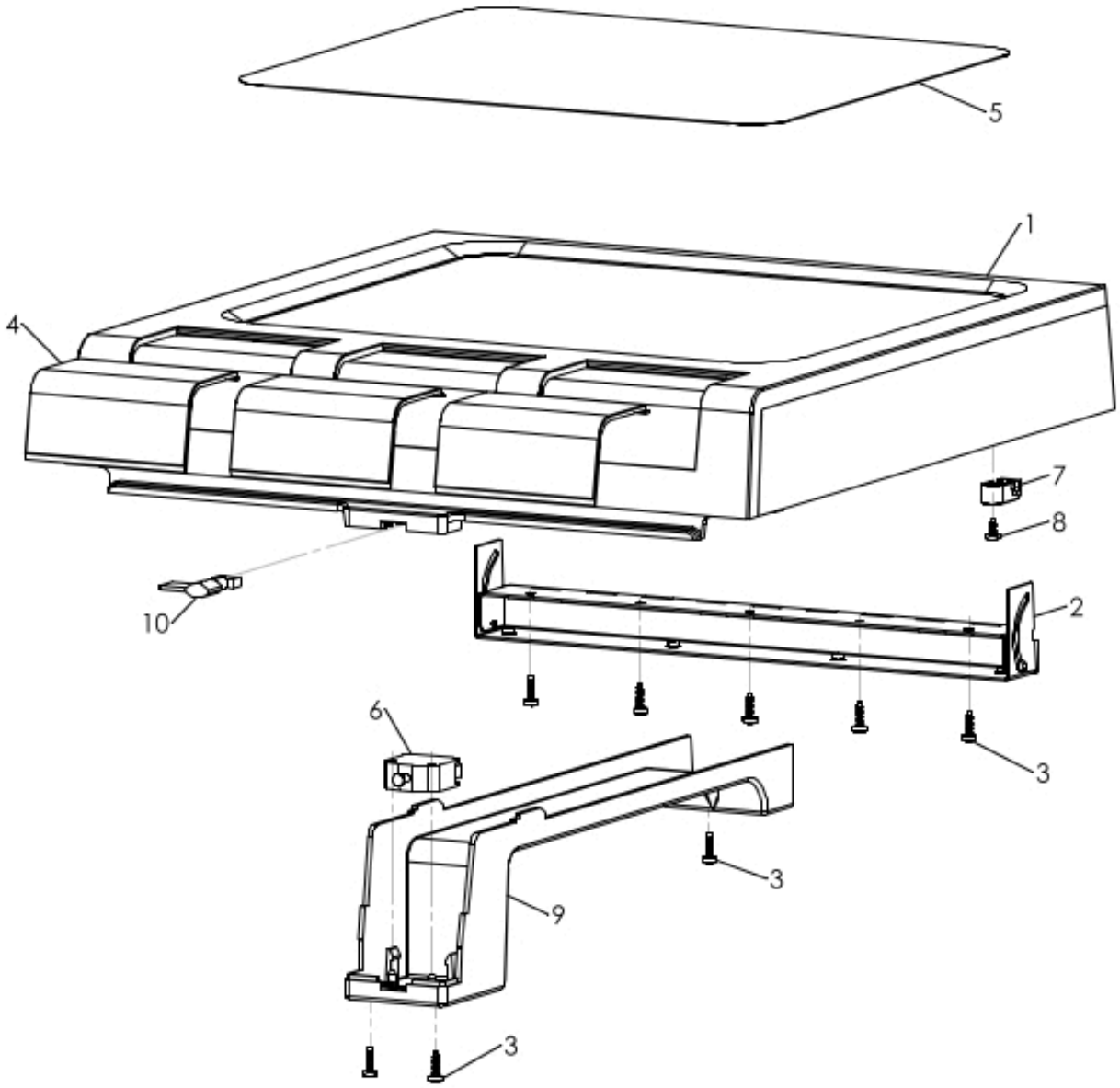

www.rheavendors.com tel: 0039 02 966 551 fax: 0039 02 96 55 086 email: rheavendors@rheavendors.com exclusive property of rheavendors group

UPPER COVER							
				Preventive Maintenance			
Pos.	Code	Description	Critical	A	B	C	D
1	Z001B185050NA	LID					
2	Z001B185055	LID HINGE					
3	VIT0002479	SCREW HEAD TAP 3,5X12					
4/a	Z001B185056NF	LID BLACK					
4/b	Z001B185056TR	LID GLASS					
5	Z001B185053	LID PLATE					
6	ELE0002019	SWITCH 16A 250V	X				CK
7	Z0020043037NA	BOARD FIXING BRACKET					
8	VIT0002475	SCREW HEAD TAP M3.5X8					
9	Z001B185052NA	CABLE DUCT SUP.					
10	Z0270011109IC	SERVICE KEY RAL2011	X				

www.rheavendors.com tel: 0039 02 966 551 fax: 0039 02 96 55 086 email: rheavendors@rheavendors.com exclusive property of rheavendors group

rear cabinet

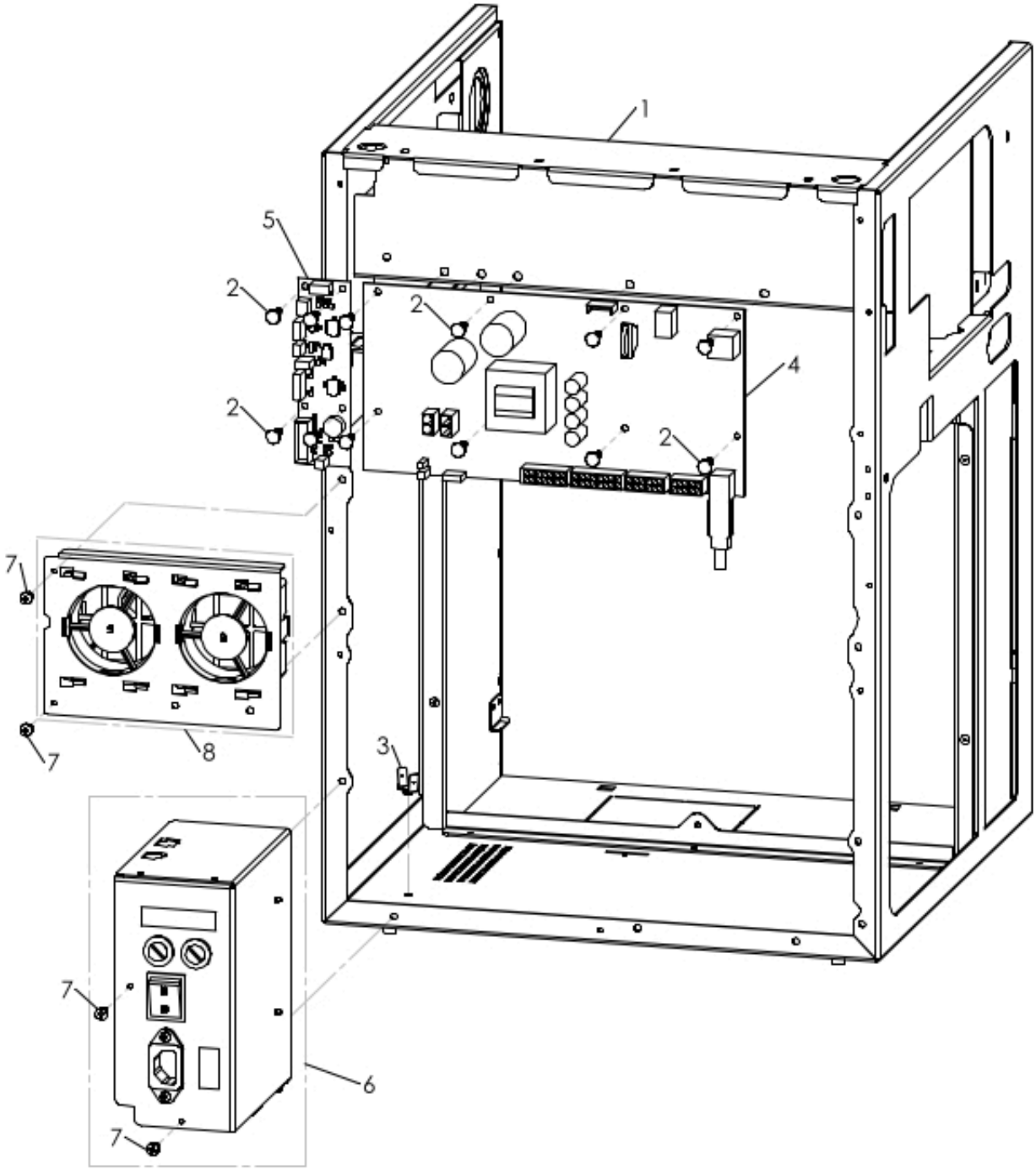

www.rheavendors.com tel: 0039 02 966 551 fax: 0039 02 96 55 086 email: rheavendors@rheavendors.com exclusive property of rheavendors group

rear cabinet							
				Preventive Maintenance			
Pos.	Code	Description	Critical	A	B	C	D
1	Z001B185005-05NA	CABINET					
2	ELE0062020	BOARD SUPPORT					
3	ELE0060520	GROUND PIN					
4		See table STM 32 BOARD					
5	BRD0700100-00	INTERFACE BOARD	X				
6		See table control panel					
7	VIT0000011	SCREW HEAD TAP CAP M4X8					
8		See table ASPIRATION FAN					

www.rheavendors.com tel: 0039 02 966 551 fax: 0039 02 96 55 086 email: rheavendors@rheavendors.com exclusive property of rheavendors group

DOOR

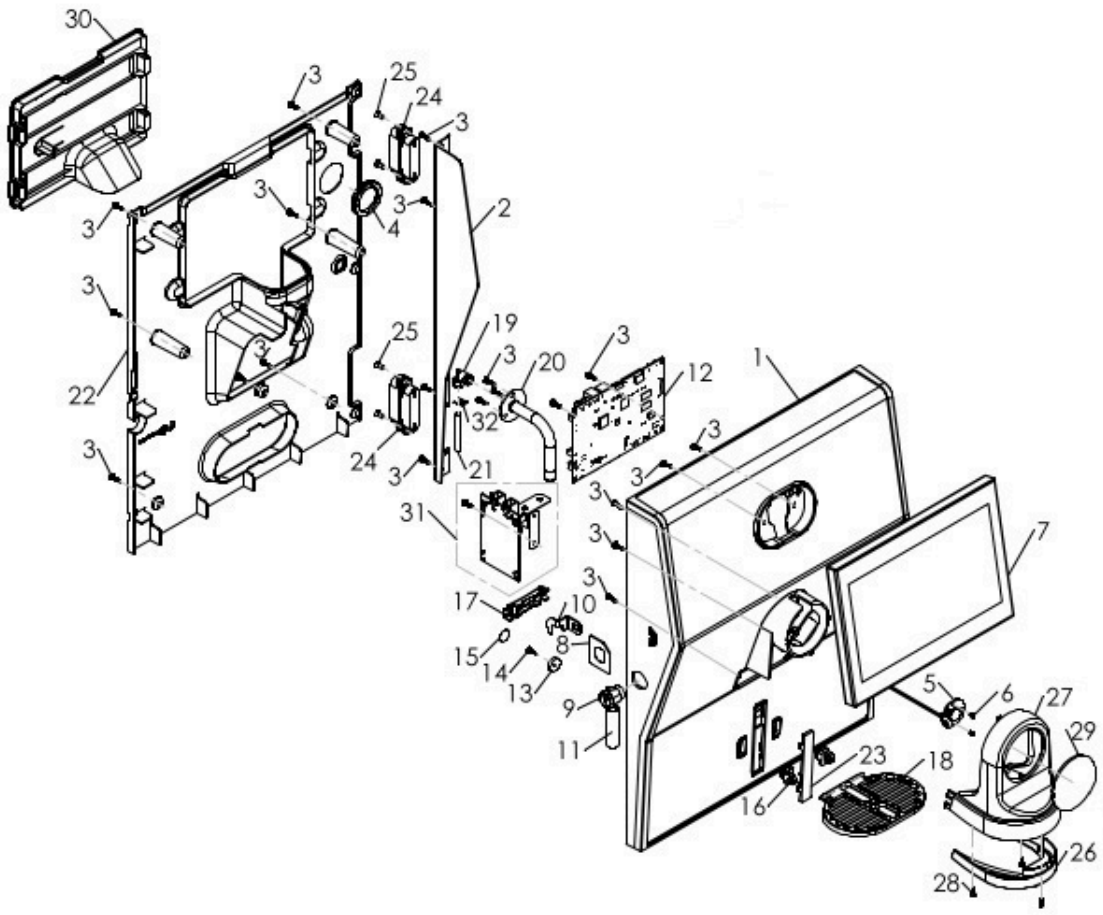

www.rheavendors.com tel: 0039 02 966 551 fax: 0039 02 96 55 086 email: rheavendors@rheavendors.com exclusive property of rheavendors group

DOOR							
				Preventive Maintenance			
Pos.	Code	Description	Critical	A	B	C	D
1/a	Z002B185034R	§ DOOR W/SPEAR					
1/b	Z002B185034R1	§ DOOR W/O SPEAR					
1/c	Z002B185034R2	§ BLACK DOOR W/SPEAR					
1/d	Z002B185034R3	§ BLACK DOOR W/O SPEAR					
2	Z002B185029NA	HINGES INTERFACE PLATE					
3	VIT0002479	SCREW HEAD TAP 3,5X12					
4	GUA0010503	ELECTRICAL GROMMET DG 29					
5	Z002A158227	LOGO BACKLIGHTING BOARD					
6	VIT0002001	SCREW ST HEAD CAP M2.9X6.5					
7	Z002B185042CL-01	§TOUCH 7"	X				
8	Z002A122018	LOCK PLATE					
9	SER0000024	LOCK MM20 + KEY 3374	X				
10	Z002B185020	LOCK PLATE					
11	GUA0020028	LOCK KEY PROTECTION					
12	SCHB169004-01	SMU BOARD	X				
13	ELTA122003	DOOR MAGNET 16X4,5X3,2					
14	VIT0002111	2.9x 13 TAPPING TCB SCREW					
15	1010100199	MAGNET TRASPARENT ADHESIVE					
16	Z0020039073NA	CUP SUPPORT PIN BLACK	X2				
17	Z0020039087-03IC	CUP HOLDER BRACKET					
18/a	Z002B185025NA	CUP SUPPORT	X				
18/b	Z002B222020	INOX GUIDE					
19	Z0100001185	ELBOW CONNECTOR 6-1/8 INOX316L					
20	Z002B185044	HOT WATER SPEAR W/O TAP	X				
21	TTEF04/06T	PTFE PIPE 4X6	X	Y	Y	Y	Y
22	Z002B185024-01NA	INTERNAL COVER					
23/a	Z002B185027NA	CUP SENSOR COVER					
23/b	ELTB185001R	§ CUPS SENSOR	X				
24	Z002B185021	HINGE					
25	VIT0000107	SCREW COUNT FLAT HEAD M4X10					
26	Z007B185007NA	LOWER NOSE COVER					
27	Z002B185035XC	FRONTAL AESTHETIC NOSE					
28	VIT0002064	SCREW ST HEAD CAP M2.9X9.5					
29	103B185023R	§rhTT1 LOGO rhTT1 RHEA					
30	Z002B185049IC	SMU COVER					
31		See table RFID KIT					

www.rheavendors.com tel: 0039 02 966 551 fax: 0039 02 96 55 086 email: rheavendors@rheavendors.com exclusive property of rheavendors group

mixer plan

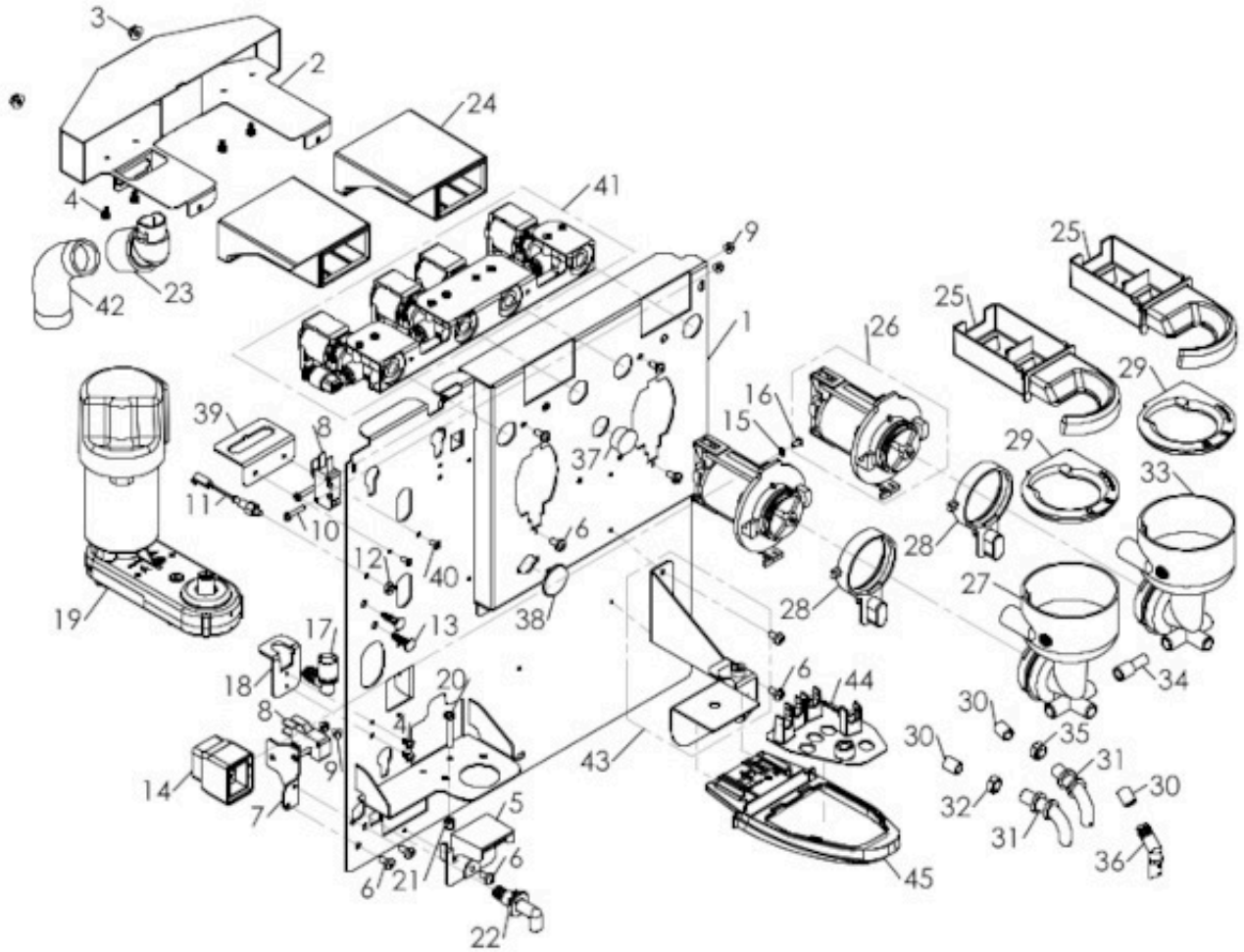

www.rheavendors.com tel: 0039 02 966 551 fax: 0039 02 96 55 086 email: rheavendors@rheavendors.com exclusive property of rheavendors group

mixer plan							
				Preventive Maintenance			
Pos.	Code	Description	Critical	A	B	C	D
1	Z026B185010	ESPRESSO MIXER PLATE					
2	Z026B185025	TRAP DRAWER					
3	DAM0000056	NUT M4					
4	VIT0002009	SCREW ST HEAD CAP M3.5X6.5					
5	Z0010020836CL	§DRIP TRAY SENSOR	X				
6	VIT0000011	SCREW HEAD TAP CAP M4X8					
7	Z026B185015	MICROSWITCH SUPPORT					
8	ELE0001522	MICROSWITCH	X				
9	VIT0004701	NUT M3					
10	VIT0000006	SCREW HEAD TAP CAP M3X16					
11	ELE0000932	PROBE	X				
12	VIT0004816	NUT M4					
13	ELE0062020	BOARD SUPPORT					
14	ELE0000467-02	FAN HEATER 24V DC + BOARD	X				
15	VIT0003102	SPRING WASHER 3,2					
16	VIT0000002	SCREW HEAD TAP CAP M3X6					
17	Z0250014084-02	FEMALE CONNECTOR					
18	Z0260014009-01	H2O CONNECTOR SUPPORT					
19	Z0090002250R	§ VARIFLEX BREW. GEARBOX MOTOR	X			CK	X
20	VIT0000015	SCREW HEAD TAP CAP M4X25					
21	VIT0004815	NUT M4					
22	Z0080100084	90° CONNECTOR					
23	Z0010025153NA	EXTRACTOR TUBE 20MM CONNECTOR			CK	CK	
24	Z0010027214	TRAP DRAWER					
25	Z008B185011PG	REMOVABLE TRAP DRAWER R5012					
26		See table mixer					
27	Z0080200103CPG	MIXING BOWL F.W/H20 BREAKER	X	Y	Y	Y	Y
28	Z0080100006IC	LOCK RING RAL2011	X				
29	Z008B185010PG	UPPER RING RAL5012	X				
30/a	TSIL06/09PG-10	SILICON HOSE D6X9 R5012 MT.10					
30/b	TSIL06/09PG-50	SILICON HOSE D6X9 R5012 MT.50	X				
31	Z0010020052	PRODUCT NOZZLE	X	Y	Y	Y	Y
32	Z0080100129	HOSE RING GREEN D.9					
33	Z0080200101LPG	BLUE LEFT MIX.BODY H2O W/BREAK	X	Y	Y	Y	Y
34	Z0080100095PG	REDUCTION					
35	Z0080100130	HOSE RING BLUE D.9					
36	Z0020039533	SPOUT DELIVERY 30° D.6	X				
37	GUA0011010	PLUG					
38	Z0080100035NA	CONNECTOR PLUG BLACK					
39	Z001B185003	16-POLE CONNECTOR BRACKET					
40	VIT0007021	BLIND RIVET 3X6					
41		See table SOLUBLES VALVES					
42	TEOL000001CL7	EXTRACTOR TUBE D.20 130MM	X				X
43		See table PIPES SUPPORT					
44	Z007B185003NA	SUP. TUBE HOLDER - DOUBLE CAP.					

www.rheavendors.com tel: 0039 02 966 551 fax: 0039 02 96 55 086 email: rheavendors@rheavendors.com exclusive property of rheavendors group

mixer plan							
45	Z007B185006NA	UNIVERSAL PIPE SUPPORT	X				

www.rheavendors.com tel: 0039 02 966 551 fax: 0039 02 96 55 086 email: rheavendors@rheavendors.com exclusive property of rheavendors group

mixer

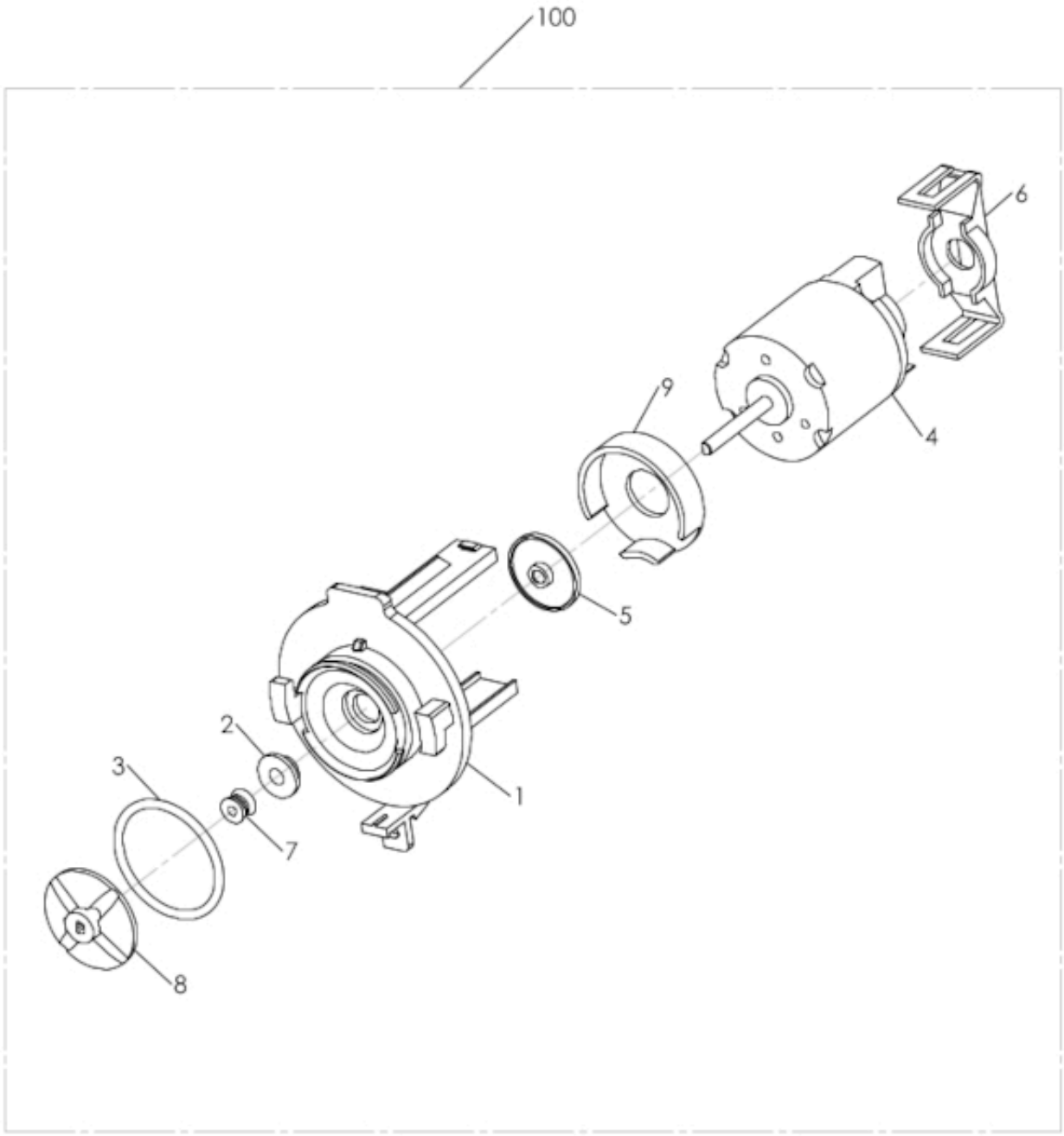

www.rheavendors.com tel: 0039 02 966 551 fax: 0039 02 96 55 086 email: rheavendors@rheavendors.com exclusive property of rheavendors group

mixer							
				Preventive Maintenance			
Pos.	Code	Description	Critical	A	B	C	D
1	Z0080100005	MOTOR MIXER BASE					
2	Z0080100015	MIXER BUSH	X				
3	GUA0000084	OR 3131 RED SILICONE A60	X	Y	Y	Y	Y
4	Z0090003023	MIXER MOTOR 24V DC SHAFT D.4	X				X
5	Z0080100024	MIXER FAN					
6	Z0080100009IC	MIXER MOTOR SUPPORT RAL2011	X				
7	Z0080100102	MIXER SHAFT GASKET	X	CK	Y	Y	Y
8	Z0080100011	MIXER FAN	X	CK	Y	Y	Y
9	Z0080100023IC	MIXER COVER RAL2011					
100	Z0080100001R	§ MIXER BOWL BASE+MOTOR	X				

www.rheavendors.com tel: 0039 02 966 551 fax: 0039 02 96 55 086 email: rheavendors@rheavendors.com exclusive property of rheavendors group

SOLUBLES VALVES

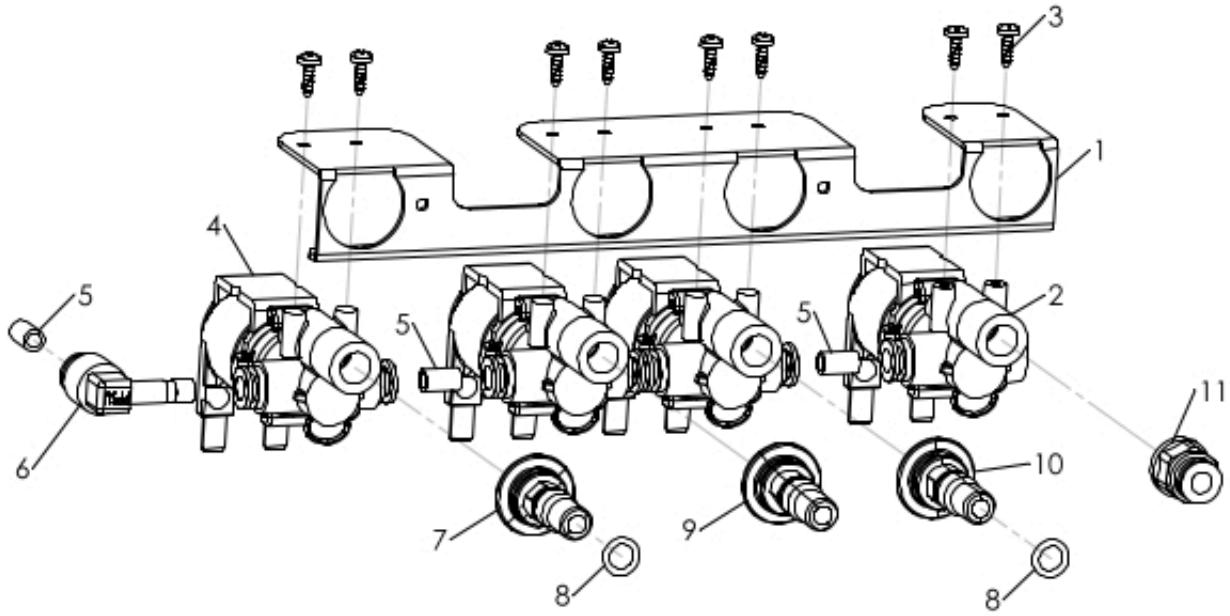

www.rheavendors.com tel: 0039 02 966 551 fax: 0039 02 96 55 086 email: rheavendors@rheavendors.com exclusive property of rheavendors group

SOLUBLES VALVES							
				Preventive Maintenance			
Pos.	Code	Description	Critical	A	B	C	D
1	Z007B185023	VALVE SUPPORT					
2	Z0110001141	EV 2Vx2 DN2 G1/8 F A.R. 24VDC	X			X	
3	VIT0002011	SCREW ST HEAD CAP M2.9X9.5					
4	Z0110001134	VALVE BLOCK 3V 2W 24V DC	X			X	
5	TTEF04/06T	PTFE PIPE 4X6	X	Y	Y	Y	Y
6	Z0100001156	FITTING ELBOW D6-D6	X				
7	Z008B185013MD	EV MIXER THR.NOZZLE Ø5 GREEN	X				
8	GUA0000085	OR 106 RED SILICONE A70	X	Y*	Y*	Y*	Y*
9	Z008B185013NA	EV MIXER THR.NOZZLE Ø5 BLACK	X				
10	Z008B185013PL	EV MIXER THR.NOZZLE Ø5 BLUE	X				
11	Z0100001150	STRAIGHT CONNECTOR M G1/8 D6					

www.rheavendors.com tel: 0039 02 966 551 fax: 0039 02 96 55 086 email: rheavendors@rheavendors.com exclusive property of rheavendors group

PIPES SUPPORT

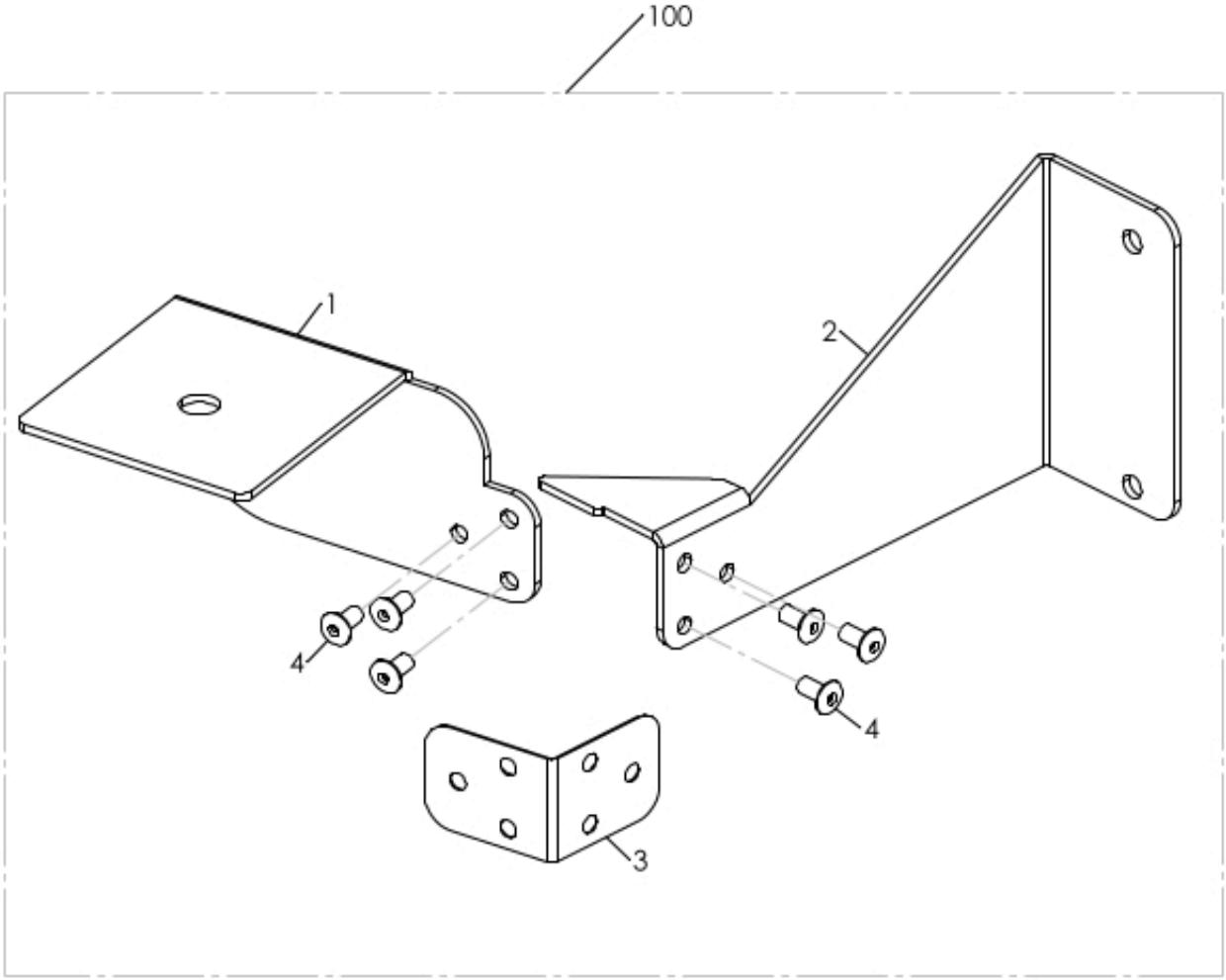

www.rheavendors.com tel: 0039 02 966 551 fax: 0039 02 96 55 086 email: rheavendors@rheavendors.com exclusive property of rheavendors group

PIPES SUPPORT							
				Preventive Maintenance			
Pos.	Code	Description	Critical	A	B	C	D
1	Z0072300190NA	MOBILE NOZZLE SUPPORT					
2	Z0072300200NA	FIXED NOZZLE SUPPORT					
3	Z0072300210	BAND SPRING					
4	VIT0007021	BLIND RIVET 3X6					
100	Z0072300290CL	§ NOZZLE SUPPORT					

www.rheavendors.com tel: 0039 02 966 551 fax: 0039 02 96 55 086 email: rheavendors@rheavendors.com exclusive property of rheavendors group

HYDRIC CIRCUIT

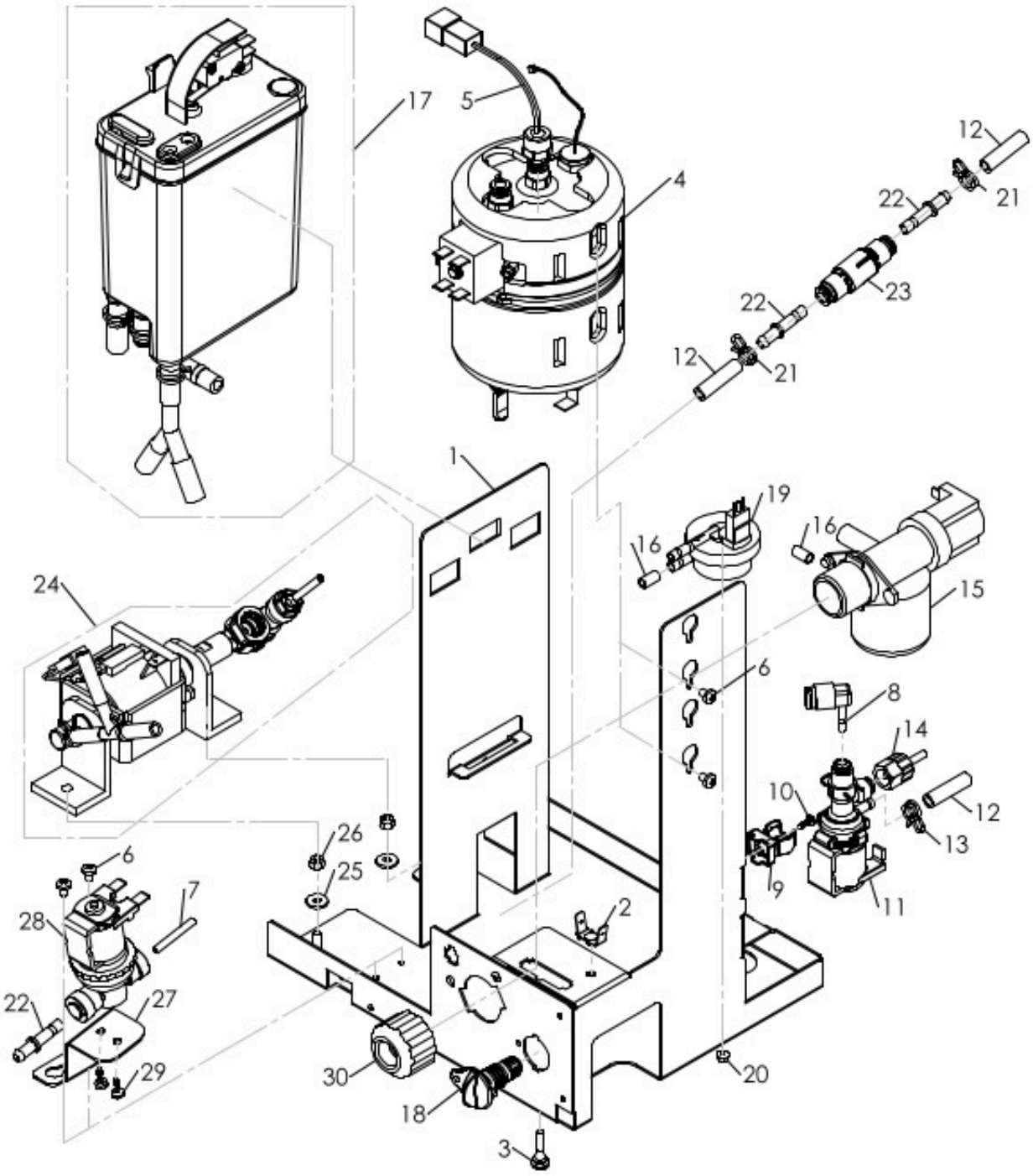

www.rheavendors.com tel: 0039 02 966 551 fax: 0039 02 96 55 086 email: rheavendors@rheavendors.com exclusive property of rheavendors group

HYDRIC CIRCUIT

				Preventive Maintenance			
Pos.	Code	Description	Critical	A	B	C	D
1	Z060B185106	WATER CIRCUIT COMP. SUPPORT					
2	ELE0060520	GROUND PIN					
3	GUAA113001	BUMPER					
4	Z0600019850	§ BOILER L. 0,5 1500W 230V	X				
5	ELE0000975	PROBE	X	CK	CK	CK	CK
6	VIT0000021	SCREW HEAD TAP CAP M4X6					
7	TTEF04/06T	PTFE PIPE 4X6	X	Y	Y	Y	Y
8	Z0100001238	ELBOW CONNECTOR	X				
9	Z060B185111NA	3 WAYS SUPPORT	X				
10	VIT0002011	SCREW ST HEAD CAP M2.9X9.5					
11	Z011B185023	VALVE 3/2 24V+BOARD PWM	X		CK	X	
12/a	TSIL05/08T-10	SILICON HOSE 5X8 MT.10	X	Y	Y	Y	Y
12/b	TSIL05/08T-50	SILICON HOSE 5X8 MT.50					
13	FASC000111	TUBE FIXING CLIP					
14	Z0250014086R7	§WATER INLET TUBE 0,09 mt	X				
15	Z0110001058	WATER INLET VALVE 24V DC	X		CK		X
16/a	TSIL04/06T-10	SILICON HOSE 4X6 MT.10	X	Y	Y	Y	Y
16/b	TSIL04/06T-50	SILICON HOSE 4X6 MT.50					
17		See table water inlet panel					
18	Z0600016455	H2O OUTLET PLUG	X				
19	Z0110007003	VOLUMETRIC COUNTER	X	CK	CK	CK	X
20	VIT0004701	NUT M3					
21	FASC000105	CLAMP					
22	Z0100001237	STRAIGHT STEM CONNECTOR					
23	Z011B185001	NO RETURN VALVE	X				
24		See table COFFEE PUMP					
25	VIT0003301	WASHER 4,3X12X1,5					
26	VIT0004815	NUT M4					
27	Z060B185110	OUTLETY BOILER VALVE SUPPORT					
28	Z011B185022	VALVE 2 WAY 24DC	X				
29	VIT0002469	SCREW HEAD TAP M3.5X10					
30	Z0100006001-01	F/F CYLINDRIC 3/4-3/8 REDUCT.					

www.rheavendors.com tel: 0039 02 966 551 fax: 0039 02 96 55 086 email: rheavendors@rheavendors.com exclusive property of rheavendors group

water inlet panel

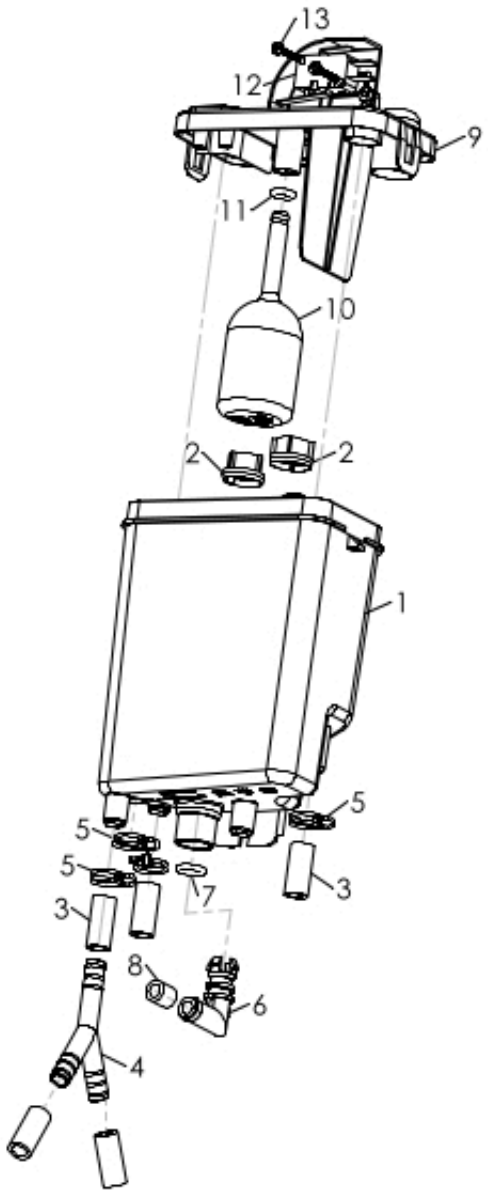

www.rheavendors.com tel: 0039 02 966 551 fax: 0039 02 96 55 086 email: rheavendors@rheavendors.com exclusive property of rheavendors group

water inlet panel							
				Preventive Maintenance			
Pos.	Code	Description	Critical	A	B	C	D
1	Z0800013041	AIR BREAK TANK					
2	Z0110020007	PLASTIC FILTER DIAM. 20	X			X	
3/a	TSIL07/11T-10	SILICON HOSE 7X11 MT.10	X	Y	Y	Y	Y
3/b	TSIL07/11T-50	SILICON HOSE 7X11 MT.50					
4	Z0100001065	CONNECTOR "Y"					
5	FASC000109	CLAMP					
6	Z0800009211	ELBOW CONNECTOR	X				X
7	GUA0000043	OR 109 NBR AL 75 BLACK	X				X
8/a	TSIL06/11T-10	SILICON HOSE 6X11 MT.10	X	Y	Y	Y	Y
8/b	TSIL06/11T-50	SILICON HOSE 6X11 MT.50					
9	Z0800013043	AIR BREAK COVER					
10	Z0800013046	AIR BREAK WASTE FLOAT	X				
11	GUA0000082	SILICON GASKET D.6	X		CK		CK
12	ELE0001514	MICROSWITCH 3A 125-250VA	X			CK	X
13	VIT0002013	SCREW ST HEAD CAP M2.9X19					

www.rheavendors.com tel: 0039 02 966 551 fax: 0039 02 96 55 086 email: rheavendors@rheavendors.com exclusive property of rheavendors group

COFFEE PUMP

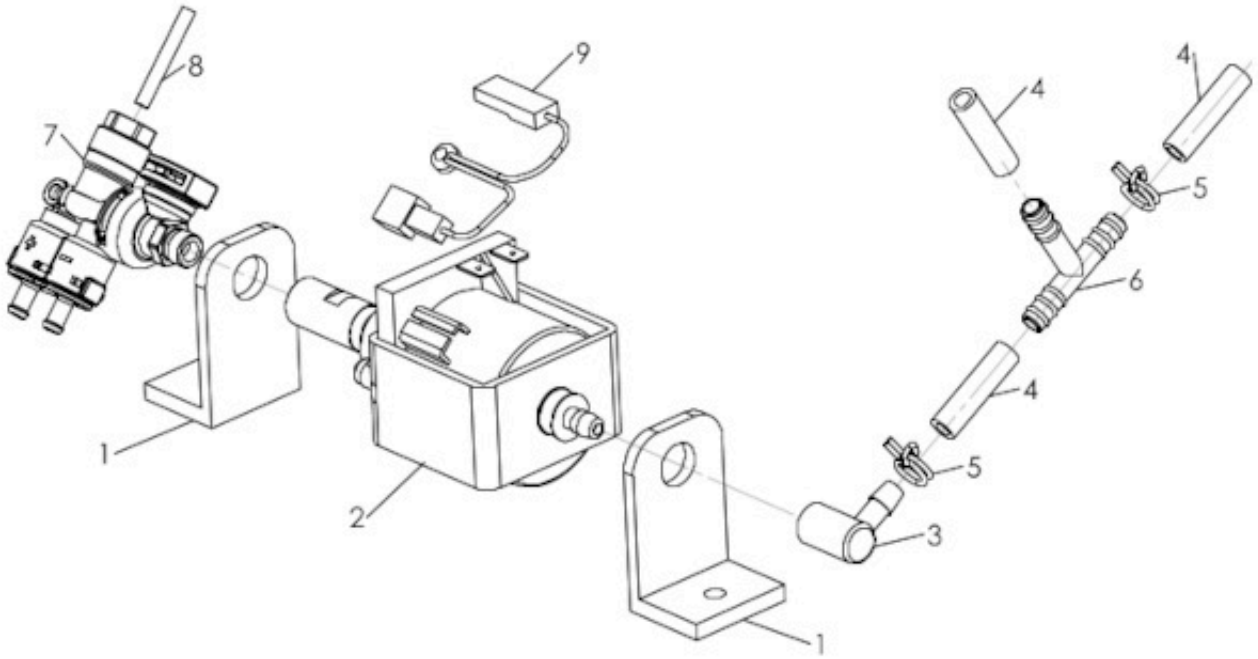

www.rheavendors.com tel: 0039 02 966 551 fax: 0039 02 96 55 086 email: rheavendors@rheavendors.com exclusive property of rheavendors group

COFFEE PUMP							
				Preventive Maintenance			
Pos.	Code	Description	Critical	A	B	C	D
1	Z0110004022	SUPPORT					
2/a	Z0110004065	PUMP PLUS PGØ7 230V-50HZ	X		CK	X	
2/b	Z0110004067	PUMP EP5 220V 60HZ For version 220V	X		CK	X	
3	Z0110004023	CONNECTOR	X				
4/a	TSIL05/08T-10	SILICON HOSE 5X8 MT.10	X	Y	Y	Y	Y
4/b	TSIL05/08T-50	SILICON HOSE 5X8 MT.50					
5	FASC000105	CLAMP					
6	Z0100003022	T CONNECTOR 461 TS UL	X				
7	Z0110001151R	VALVE 3W W/BY-PASS 11BAR	X		CK	X*	
8	TTEF04/06T	PTFE PIPE 4X6	X	Y	Y	Y	Y
9	ELE0000915	PUMP THERMOPROTECTOR	X				

www.rheavendors.com tel: 0039 02 966 551 fax: 0039 02 96 55 086 email: rheavendors@rheavendors.com exclusive property of rheavendors group

GRINDER

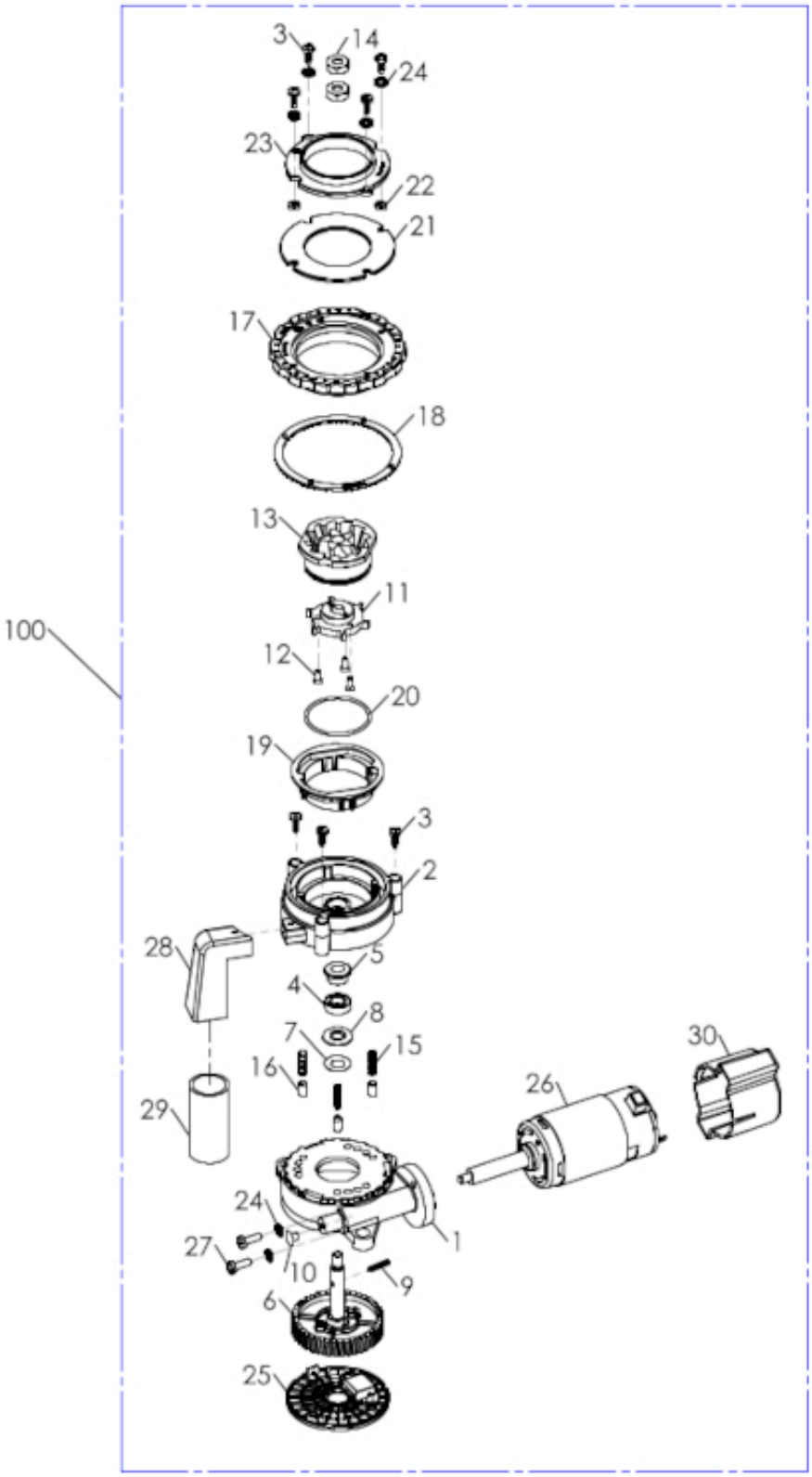

www.rheavendors.com tel: 0039 02 966 551 fax: 0039 02 96 55 086 email: rheavendors@rheavendors.com exclusive property of rheavendors group

GRINDER							
				Preventive Maintenance			
Pos.	Code	Description	Critical	A	B	C	D
1	Z0320001639NA	MOTOR SUPPORT (BLACK)					
2	Z0320001602NA	GRINDER BLADES SUPPORT					
3	VIT0002469	SCREW HEAD TAP M3.5X10					
4	VIT0009325	BEARING	X				CK
5	Z0320001641	BUSHING					
6	Z0320001608	§ WHEEL+SHAFT					
7	Z0320001629	CUP SPRING 16x8,2 SP. 0,4					
8	Z0320001625	BUSH					
9	Z0320001704	GRINDER ROTATION PIN REINFORCE	X		CK	CK	CK
10	GUA0011023	PLUG (BLACK)					
11	Z0320001636	EJECTOR	X			CK	
12	VIT0000121	SCREW COUNT FLAT HEAD M3X8					
13	Z0320001680	CONIC BLADES PLUS	X		CK		X
14	Z0320001642	LOWER GRINDER FIXING NUT					
15	Z0320001643	SPRING D.4X15X0,6					
16	Z0320001624	REGULATION PIN					
17	Z0320001605NA	GRINDER REGULATION RING BLACK					
18	Z0320001606NA	REGULATION RING (BLACK)					
19	Z0320001635-03NA	GRINDER SUPPORT BLACK					
20	GUA0000124	SILICONE OR 2137	X		X		
21	Z0320001622	UPPER GRINDER FIXING					
22	Z0320001666	SPACER D.4x7x2					
23	Z0320001607NA	DUCT BLACK					
24	VIT0003103	SPRING WASHER 4,3					
25	Z0320001604NA	PLUG BLACK					
26	Z0090003047	GRINDER MOTOR 230V DC	X				CK
27	VIT0000013	SCREW HEAD TAP CAP M4X12					
28	Z032B185001IC	GRINDER CHUTE	X				
29	TSIL15/19PG-50	SILICON HOSE 15X19 R5012 MT.50	X				
30	Z0320001615NA	GRINDER SENSOR COVER BLACK					
100	Z0320001601CLL	GRINDER VRFX BREWER PLUS					
101	Z0320001601CLLC	GRINDER VRFX PREGRINDED PLUS					

www.rheavendors.com tel: 0039 02 966 551 fax: 0039 02 96 55 086 email: rheavendors@rheavendors.com exclusive property of rheavendors group

VARIGRIND

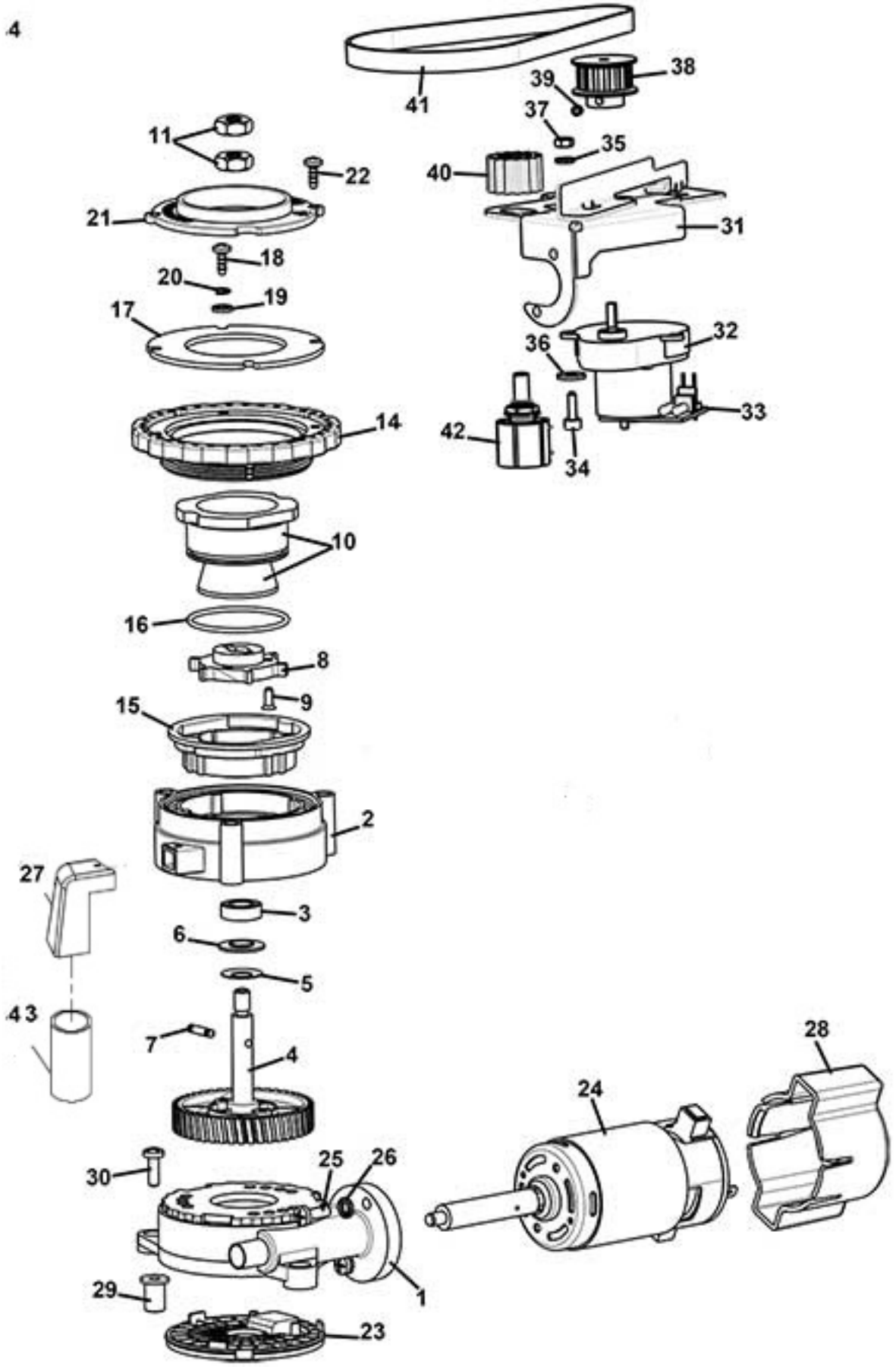

www.rheavendors.com tel: 0039 02 966 551 fax: 0039 02 96 55 086 email: rheavendors@rheavendors.com exclusive property of rheavendors group

VARIGRIND							
				Preventive Maintenance			
Pos.	Code	Description	Critical	A	B	C	D
1	Z0320001639NAR	§ MOTOR SUPPORT BLACK+PLUG					
2	Z0320001602NAR	GRINDER BLADES SUPPORT					
3	VIT0009325	BEARING	X				CK
4	Z0320001608R	TRANSMISSION WHEEL	X				CK
5	Z0320001629	CUP SPRING 16x8,2 SP. 0,4					
6	Z0320001625	BUSH					
7	Z0320001704	GRINDER ROTATION PIN REINFORCE	X		CK	CK	CK
8	Z0320001636	EJECTOR	X			CK	
9	VIT0000121	SCREW COUNT FLAT HEAD M3X8					
10	Z0320001680	CONIC BLADES PLUS	X		CK		X
11	Z0320001642	LOWER GRINDER FIXING NUT					
14	Z0320001663NA	GRINDER REGULATION RING BLACK					
15	Z0320001635-03NA	GRINDER SUPPORT BLACK					
16	GUA0000124	SILICONE OR 2137	X		X		
17	Z0320001622	UPPER GRINDER FIXING					
18	VIT0002469	SCREW HEAD TAP M3.5X10					
19	Z0320001666	SPACER D.4x7x2					
20	VIT0003103	SPRING WASHER 4,3					
21	Z0320001607NA	DUCT BLACK					
22	VIT0002469	SCREW HEAD TAP M3.5X10					
23	Z0320001604NA	PLUG BLACK					
24	Z0090003047	GRINDER MOTOR 230V DC	X				CK
25	VIT0000013	SCREW HEAD TAP CAP M4X12					
26	VIT0003103	SPRING WASHER 4,3					
27	Z032B185001IC	GRINDER CHUTE	X				
28	Z0320001615NA	GRINDER SENSOR COVER BLACK					
29	Z0320001628	NO-VIBRATION BUSH					
30	VIT0000012	SCREW HEAD TAP CAP M4X10					
31	Z0320001672	GRINDER GEARBOX MOTOR SUPPORT					
32	Z0090002042R	§ GEAR MOTOR 2,2RPM24VDC+FILT	X				
33	SCH0003740	MOTOR FILTER	X				
34	VIT0005519	SCREW TCEI 4x12 STAIL STEEL					
35	VIT0003103	SPRING WASHER 4,3					
36	VIT0003301	WASHER 4,3X12X1,5					
37	VIT0004803	NUT M4					
38	Z0320001654	GRINDER PULLEY					
39	VIT0007011	SET SCREW 4X4					
40	Z0320001670	PULLEY POTENTIOMETER					
41	Z0320001657	GRINDER BELT	X				
42	CBLXS00317	VARIGRINDER WIRING					
43	TSIL15/19PG-50	SILICON HOSE 15X19 R5012 MT.50	X				
100	Z0320001671CLL	§VARIGRINDER VARIFLEX 230V From pos.1 to pos. 42 excluded pos.29+30					
101	Z0320001670R	§PULLEY POTENTIOMETER+WIRING pos.40+42					

www.rheavendors.com tel: 0039 02 966 551 fax: 0039 02 96 55 086 email: rheavendors@rheavendors.com exclusive property of rheavendors group

GRINDER COVER

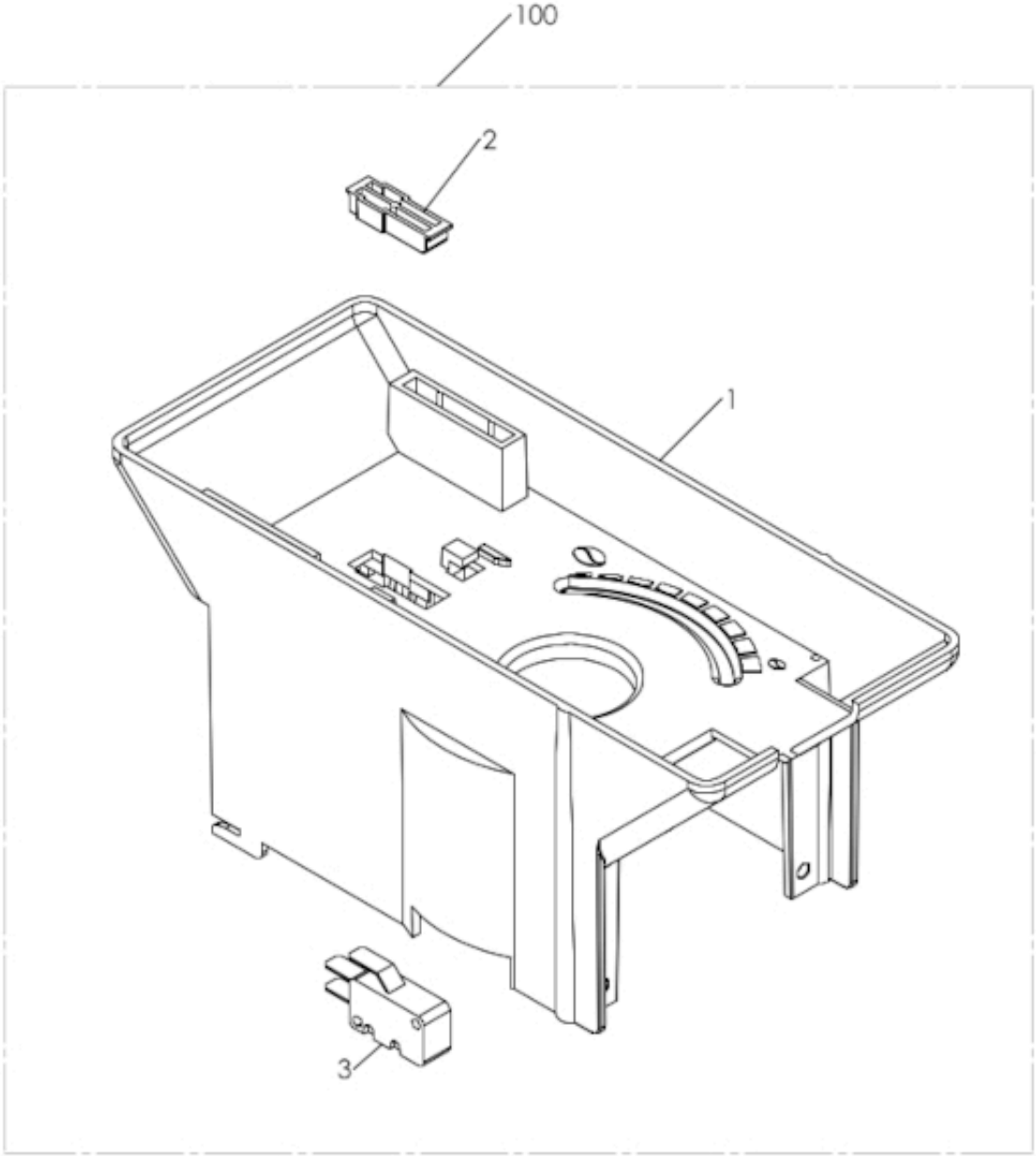

www.rheavendors.com tel: 0039 02 966 551 fax: 0039 02 96 55 086 email: rheavendors@rheavendors.com exclusive property of rheavendors group

GRINDER COVER							
				Preventive Maintenance			
Pos.	Code	Description	Critical	A	B	C	D
1	Z0232300002	GRINDER COVER					
2	Z0230015307NA	BUTTON BLACK	X				
3	CBLB185022	MICRO SWITCH W/CABLE	X				
100	Z0230015301CL3	§GIRNDER COVER					

www.rheavendors.com tel: 0039 02 966 551 fax: 0039 02 96 55 086 email: rheavendors@rheavendors.com exclusive property of rheavendors group

PROFESSIONAL BREWER GROUP D.36

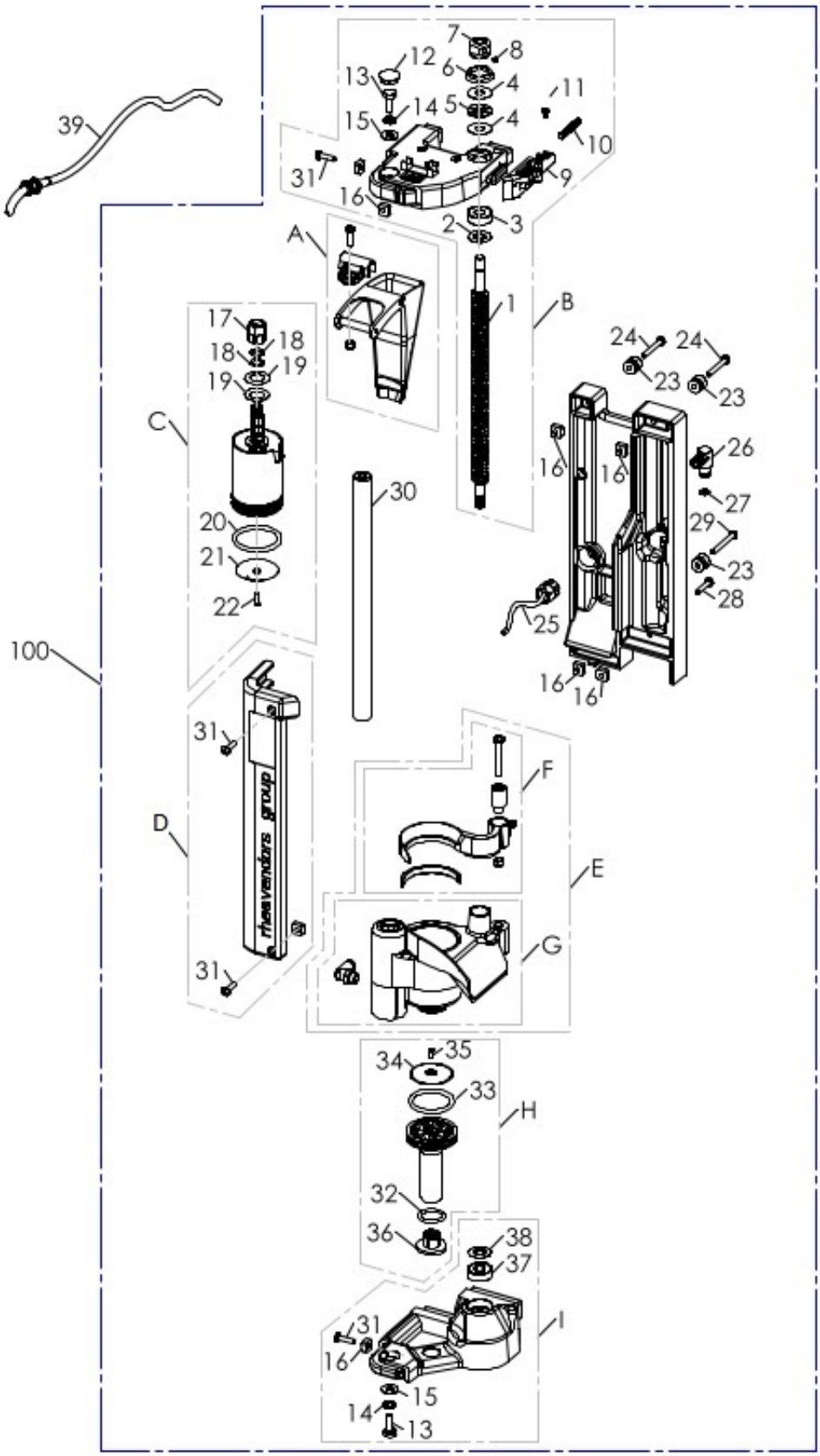

www.rheavendors.com tel: 0039 02 966 551 fax: 0039 02 96 55 086 email: rheavendors@rheavendors.com exclusive property of rheavendors group

PROFESSIONAL BREWER GROUP D.36							
				Preventive Maintenance			
Pos.	Code	Description	Critical	A	B	C	D
A	Z0250014033R	§ CHUTE D. 36	X				
B	Z0250014005R2	§UPPER SUPPORT WITHOUT CHUTE					
C	Z0250014040R	§ UPPER FILTER HOLDER D.36	X				
D	Z0250014019R	§ FRONTAL COVER					
E	Z0250014030R	§ CHAMBER D.36	X				
F	Z0250014034R	§ BRUSH D.36	X	X	X	X	X
G	Z0250014032R	§ INFUSION CHAMBER D.36	X				
H	Z0250014038R	§ LOWER FILTER HOLDER D.36	X				
I	Z0250014012R	§ LOWER SUPPORT					
1	Z0250014016	SCREW 14x4					
2	Z0250014077	SPACER					
3	VIT0009320	BEARING	X				CK
4	VIT0009318	SPACER WASHER	X				CK
5	VIT0009317	BEARING	X				CK
6	GUA0001007	V RING GASKET VA16	X				CK
7	Z0250014071	NUT M8					
8	VIT0007011	SET SCREW 4X4					
9	Z0250014082	BREWER STOPPER BUTTON					
10	Z0250014081	SPRING	X				
11	VIT0002009	SCREW ST HEAD CAP M3.5X6.5					
12	GUA0011022	PLUG					
13	VIT0000249	SCREW HEX HEAD M6X16					
14	VIT0003113	SPRING WASHER 6,4					
15	Z0250014079	WASHER D.15 D.6,5 SP.1,5					
16	VIT0009112	NUT M4					
17	Z0250014086	NUT					
18	GUA0000045	OR 108 VITON 80 BLACK	X	CK	Y*	Y*	Y*
19	Z0250014048	SPRING	X	CK	X2	X2	X2
20	GUA0000080	OR 4112 RED SILICONE LSR70	X	CK	Y*	Y*	Y*
21	Z0250008099	COFFEE FILTER 33,4	X	CK	Y	Y	Y
22	VIT0000129	SCREW COUNT HEAD M3X12					
23	Z0250014072	PIN					
24	VIT0001006	SCREW HEAD TAP CAP M4X30					
25	Z0250014086CL1	§WATER INLET TUBE 0,119 mt					
26	Z0250014085	MALE CONNECTOR					
27	GUA0000004	OR 104 NBR AL 75 BLACK	X	CK	X	X	X
28	VIT0001011	SCREW HEAD TAP CAP M4X20					
29	VIT0000033	SCREW HEAD TAP CAP M4X35					
30	Z0250014013-04	CYLINDRICAL GUIDE					
31	VIT0001009	SCREW HEAD TAP CAP M4X16					
32	GUA0000103	OR 3075 SILICON	X	CK	Y*	Y*	Y*
33	GUA0000080	OR 4112 RED SILICONE LSR70	X	CK	Y*	Y*	Y*
34	Z0250008019	COFFEE FILTER	X	CK	Y	Y	Y
35	VIT0000121	SCREW COUNT FLAT HEAD M3X8					
36	Z0250014027	LOWER PISTON LOCK					

www.rheavendors.com tel: 0039 02 966 551 fax: 0039 02 96 55 086 email: rheavendors@rheavendors.com exclusive property of rheavendors group

PROFESSIONAL BREWER GROUP D.36							
37	VIT0009320	BEARING	X				CK
38	Z0250014077	SPACER					
39	Z0250008176CL9	§ COFFEE OUTLET PIPE R5012					
100	Z0250014060CL	§ COFFEE BREWER VARIFLEX D.36	X				
101	Z0250014082R	§ BUTTON EXTRACTION+SPRING Include pos. 9+10+11					

www.rheavendors.com tel: 0039 02 966 551 fax: 0039 02 96 55 086 email: rheavendors@rheavendors.com exclusive property of rheavendors group

PROFESSIONAL BREWER GROUP D.45

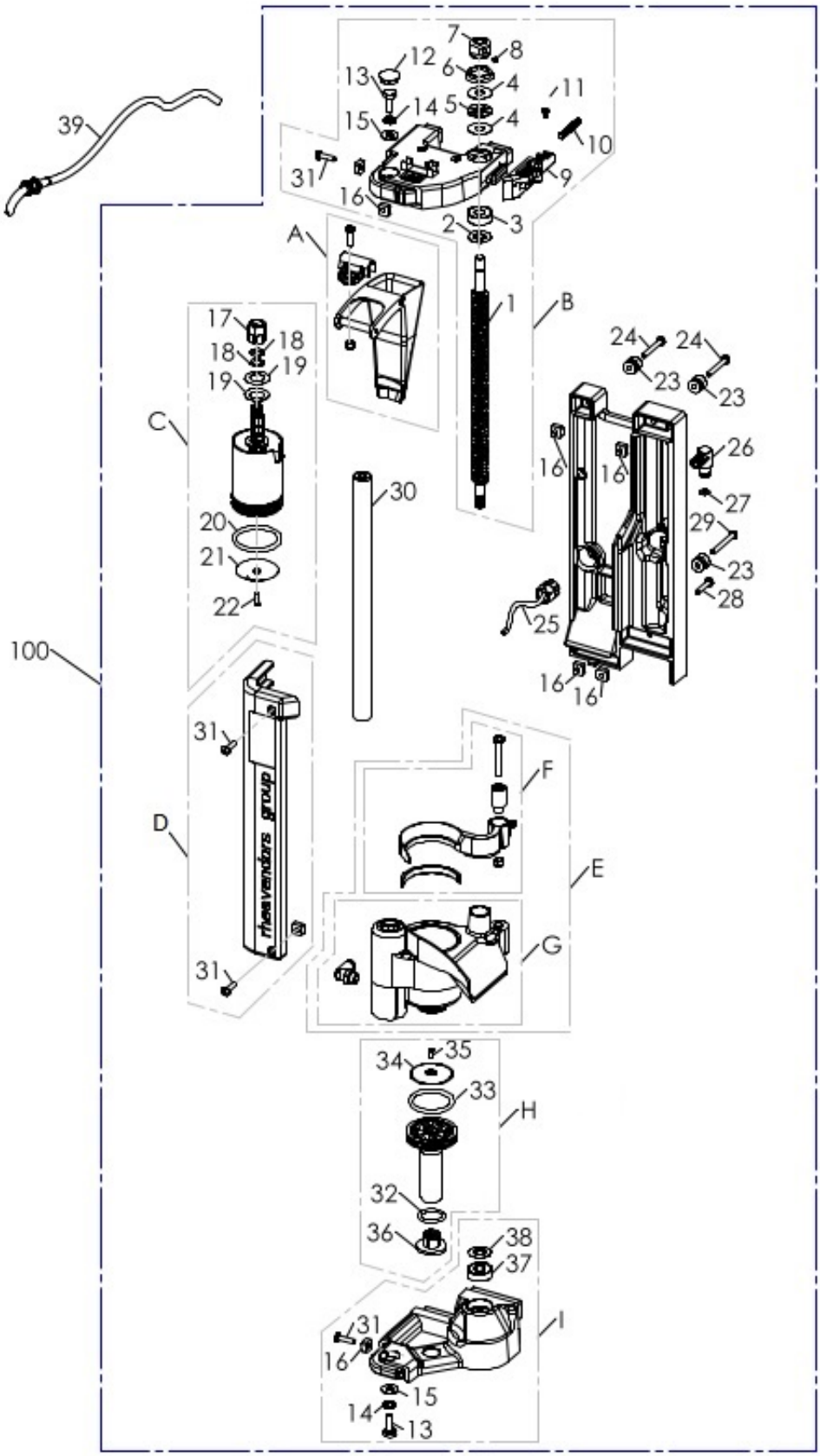

www.rheavendors.com tel: 0039 02 966 551 fax: 0039 02 96 55 086 email: rheavendors@rheavendors.com exclusive property of rheavendors group

PROFESSIONAL BREWER GROUP D.45							
				Preventive Maintenance			
Pos.	Code	Description	Critical	A	B	C	D
A	Z0250014008R	§ CHUTE D. 45	X				
B	Z0250014005R2	§UPPER SUPPORT WITHOUT CHUTE					
C	Z0250014045R	§ UPPER FILTER HOLDER D.45	X				
D	Z0250014019R	§ FRONTAL COVER					
E	Z0250014020R	§ INFUSION CHAMBER D.45	X				
F	Z0250014024R	§ BRUSH D.45	X	X	X	X	X
G	Z0250014022R	§ INFUSION CHAMBER D.45	X				
H	Z0250014028R	§ LOWER FILTER HOLDER D.45	X				
I	Z0250014012R	§ LOWER SUPPORT					
1	Z0250014016	SCREW 14x4					
2	Z0250014077	SPACER					
3	VIT0009320	BEARING	X				CK
4	VIT0009318	SPACER WASHER	X				CK
5	VIT0009317	BEARING	X				CK
6	GUA0001007	V RING GASKET VA16	X				CK
7	Z0250014071	NUT M8					
8	VIT0007011	SET SCREW 4X4					
9	Z0250014082	BREWER STOPPER BUTTON					
10	Z0250014081	SPRING	X				
11	VIT0002009	SCREW ST HEAD CAP M3.5X6.5					
12	GUA0011022	PLUG					
13	VIT0000249	SCREW HEX HEAD M6X16					
14	VIT0003113	SPRING WASHER 6,4					
15	Z0250014079	WASHER D.15 D.6,5 SP.1,5					
16	VIT0009112	NUT M4					
17	Z0250014086	NUT					
18	GUA0000045	OR 108 VITON 80 BLACK	X	CK	Y*	Y*	Y*
19	Z0250014048	SPRING	X	CK	X2	X2	X2
20	GUA0000097	OR 4131 RED SILICONE LSR70	X	CK	Y*	Y*	Y*
21	Z0250008211	COFFEE FILTER 37,3	X	CK	Y	Y	Y
22	VIT0000129	SCREW COUNT HEAD M3X12					
23	Z0250014072	PIN					
24	VIT0001006	SCREW HEAD TAP CAP M4X30					
25	Z0250014086CL1	§WATER INLET TUBE 0,119 mt					
26	Z0250014085	MALE CONNECTOR					
27	GUA0000004	OR 104 NBR AL 75 BLACK	X	CK	X	X	X
28	VIT0001011	SCREW HEAD TAP CAP M4X20					
29	VIT0000033	SCREW HEAD TAP CAP M4X35					
30	Z0250014013-04	CYLINDRICAL GUIDE					
31	VIT0001009	SCREW HEAD TAP CAP M4X16					
32	GUA0000103	OR 3075 SILICON	X	CK	Y*	Y*	Y*
33	GUA0000097	OR 4131 RED SILICONE LSR70	X	CK	Y*	Y*	Y*
34	Z0250014029	COFFEE FILTER DIAM. 37.3	X	CK	Y	Y	Y
35	VIT0000121	SCREW COUNT FLAT HEAD M3X8					
36	Z0250014027	LOWER PISTON LOCK					

www.rheavendors.com tel: 0039 02 966 551 fax: 0039 02 96 55 086 email: rheavendors@rheavendors.com exclusive property of rheavendors group

PROFESSIONAL BREWER GROUP D.45							
37	VIT0009320	BEARING	X				CK
38	Z0250014077	SPACER					
39	Z0250008176CL9	§ COFFEE OUTLET PIPE R5012					
100	Z0250014000CL	COFFEE BREWER VARIFLEX D 45	X				
101	Z0250014082R	§ BUTTON EXTRACTION+SPRING Include pos. 9+10+11					

www.rheavendors.com tel: 0039 02 966 551 fax: 0039 02 96 55 086 email: rheavendors@rheavendors.com exclusive property of rheavendors group

control panel

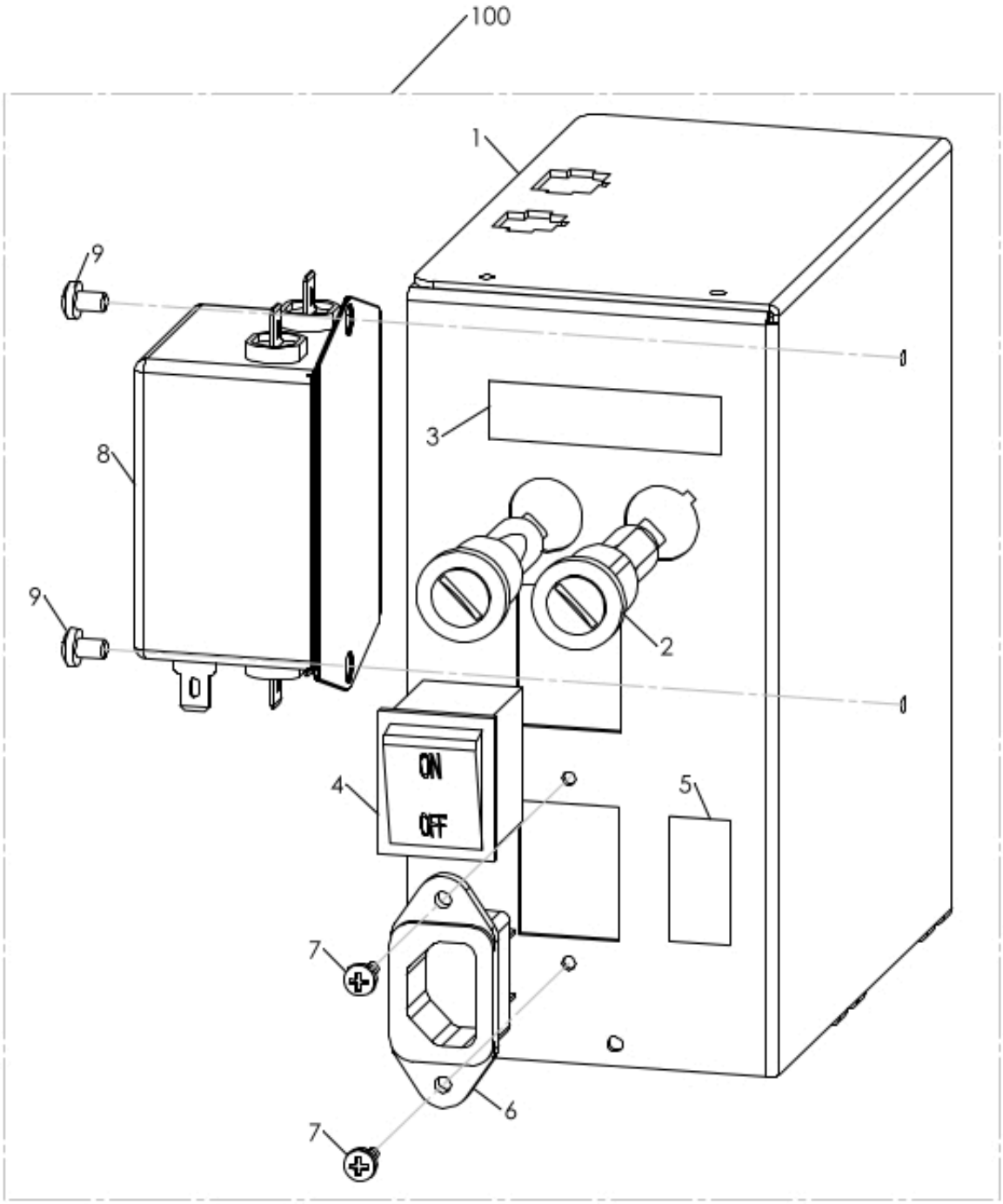

www.rheavendors.com tel: 0039 02 966 551 fax: 0039 02 96 55 086 email: rheavendors@rheavendors.com exclusive property of rheavendors group

control panel							
				Preventive Maintenance			
Pos.	Code	Description	Critical	A	B	C	D
1	Z013B185003	ELECTRICAL COMPONENTS BOX 10A					
2	ELE0003508CL	FUSE HOLDER+FUSE 12A	X				
3	1010100124	FUSE 12A LABEL					
4	ELE0002014	BIPOLAR SWITCH 15A 250V	X				
5	1010100149	230V LABEL					
6	ELE0002310	MAINS SOCKET IEC 250V 15A	X				
7	VIT0002010	SCREW ST HEAD CAP M3.5X9.5					
8	ELE0009066	NOISE FILTER 16A	X				
9	VIT0000021	SCREW HEAD TAP CAP M4X6					
100	Z013B185003CL	§ELET. PANEL 10A rhTT1 E					

www.rheavendors.com tel: 0039 02 966 551 fax: 0039 02 96 55 086 email: rheavendors@rheavendors.com exclusive property of rheavendors group

ASPIRATION FAN

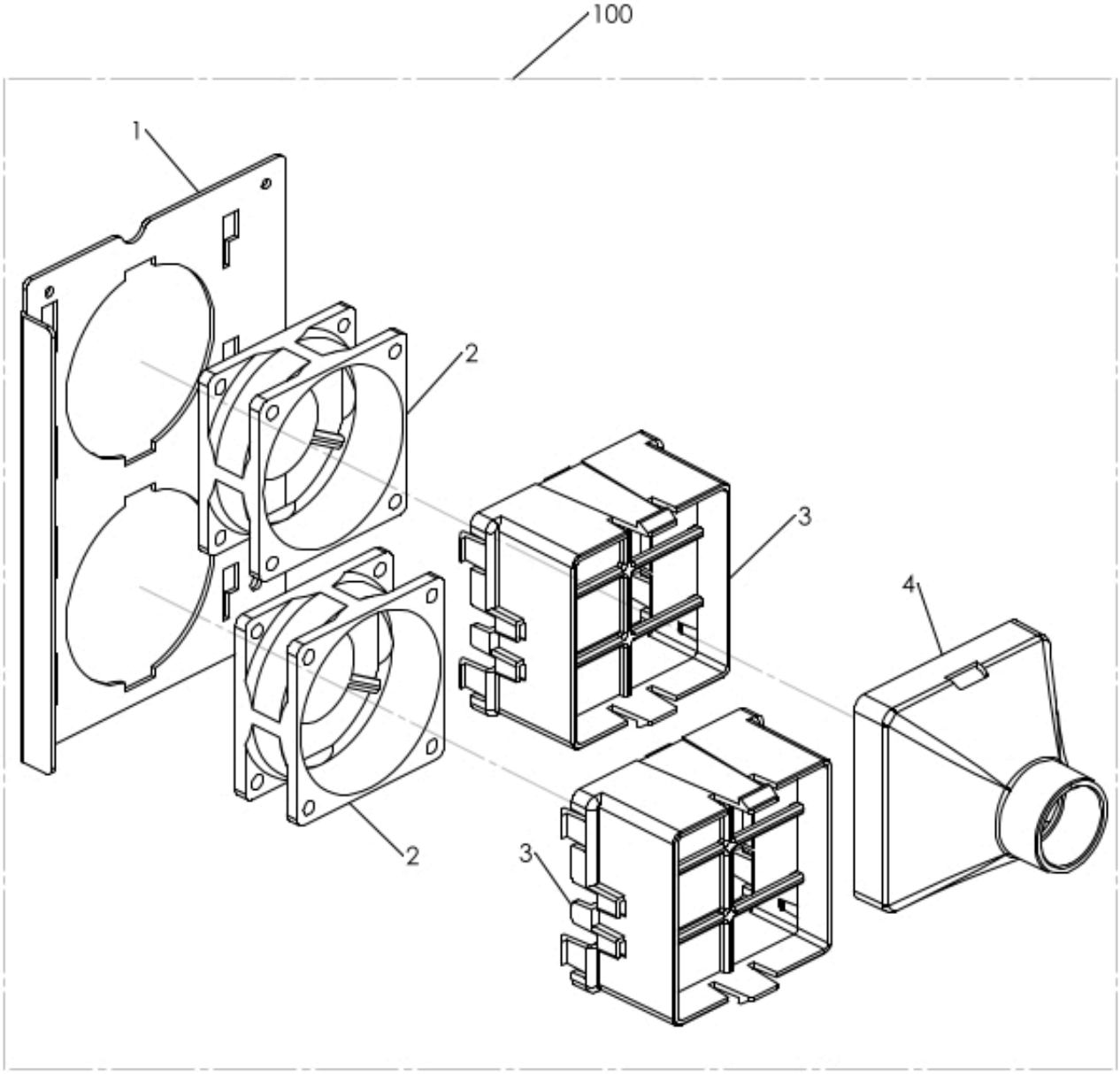

www.rheavendors.com tel: 0039 02 966 551 fax: 0039 02 96 55 086 email: rheavendors@rheavendors.com exclusive property of rheavendors group

ASPIRATION FAN							
				Preventive Maintenance			
Pos.	Code	Description	Critical	A	B	C	D
1	Z013B185011	FANS SUPPORT					
2	ELE0000462	FAN 24V DC-LOW SPEED	X			X	
3	Z0010027064	FAN SUPPORT					
4	Z0010027065	FAN CONNECTOR					
100	Z013B185009CL	§ 2 ASPIRATION FAN					

www.rheavendors.com tel: 0039 02 966 551 fax: 0039 02 96 55 086 email: rheavendors@rheavendors.com exclusive property of rheavendors group

products container

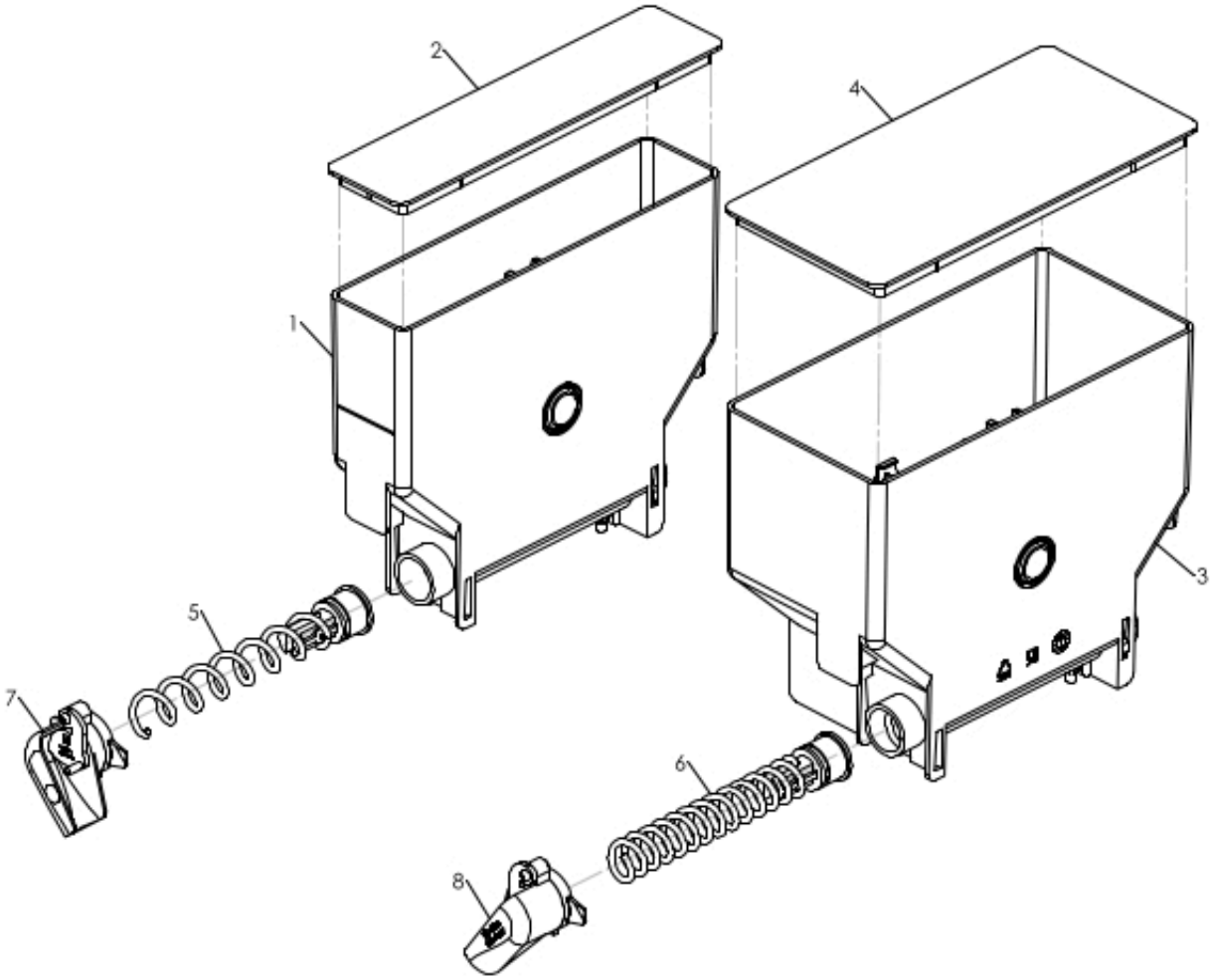

www.rheavendors.com tel: 0039 02 966 551 fax: 0039 02 96 55 086 email: rheavendors@rheavendors.com exclusive property of rheavendors group

products container							
				Preventive Maintenance			
Pos.	Code	Description	Critical	A	B	C	D
1/a	Z0230030506R	§ CANIS. 54-190 WHEEL18 W/LID	X				X
1/b	Z0230030502R	§ CANIS. 54-190 WHEEL9 W/LID	X				X
1/c	Z0230030503R	§ CANIS. 54-190 AGIT.9 W/LID	X				
1/d	Z0230030507R	§ CANIS. 54-190 AGIT.18 W/LID	X				
2	Z0230030156	CANISTER 54 LID					
3/a	Z0230030525R	§ CAN. 110-190 AGIT.18 W/LID-L	X				X
3/b	Z0230030522R	§ CAN. 110-190 AGIT.18 W/LID-R	X				X
3/c	Z0230030524R	§ CAN. 110-190 AGIT.9 W/LID-L	X				
3/d	Z0230030521R	§ CAN. 110-190 AGIT.9 W/LID-R	X				
4	Z0230030158	CANISTER 110 LID					
5	Z0230030014CL	§ SPIRAL 18					
6	Z0230030013CL	§ SPIRAL 9					
7/a	Z0230030058R	§ INGRED. CHUTE-RIGHT ORANGE	X	Y	Y	Y	Y
7/b	Z0230030044R	§ INGREDIENT CHUTE-RIGHT RED	X	Y	Y	Y	Y
8/a	Z0230030057R	§ INGREDIENT CHUTE-LEFT ORANGE	X	Y	Y	Y	Y
8/b	Z0230030043R	§ INGREDIENT CHUTE-LEFT RED	X	Y	Y	Y	Y

www.rheavendors.com tel: 0039 02 966 551 fax: 0039 02 96 55 086 email: rheavendors@rheavendors.com exclusive property of rheavendors group

coffee beans container

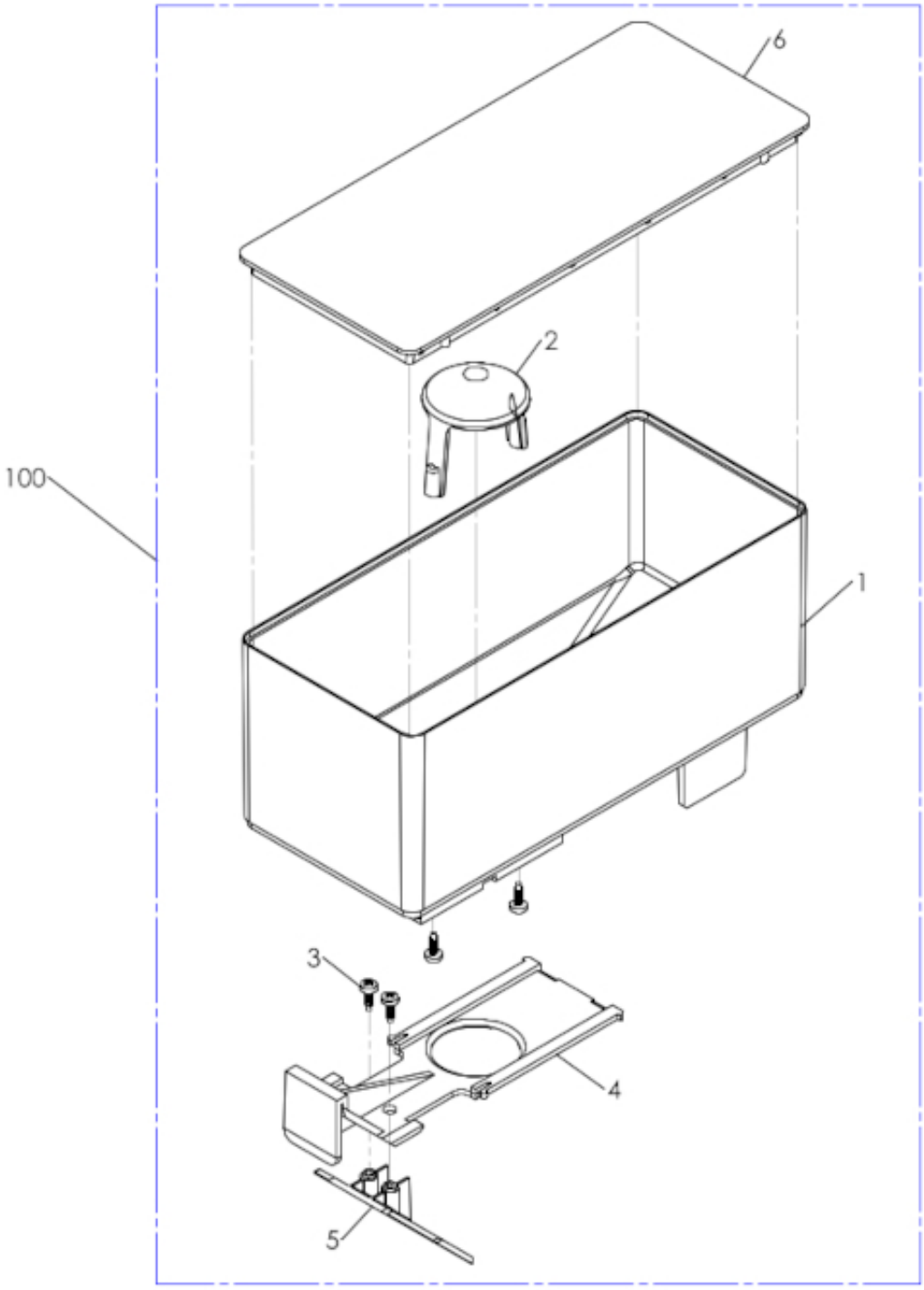

www.rheavendors.com tel: 0039 02 966 551 fax: 0039 02 96 55 086 email: rheavendors@rheavendors.com exclusive property of rheavendors group

coffee beans container							
				Preventive Maintenance			
Pos.	Code	Description	Critical	A	B	C	D
1	Z0230015302TR	COFFEE BEANS HOPPER					
2	Z0230015227TR	GRINDER COVER					
3	VIT0002469	SCREW HEAD TAP M3.5X10					
4	Z0230015303-01IC	COFFEE BEANS HOP. STOP.RAL2011					
5	Z0230015306NA	REGUL. GRINDER STOPPER PLATE					
6	Z0230015305CK	COFFEE BEANS HOP. LIDRAL7037					
100	Z0230015300R1	COFFEE BEANS HOPPER	X	Y	Y	Y	Y

www.rheavendors.com tel: 0039 02 966 551 fax: 0039 02 96 55 086 email: rheavendors@rheavendors.com exclusive property of rheavendors group

COFFEE GROUNDS CONTAINER

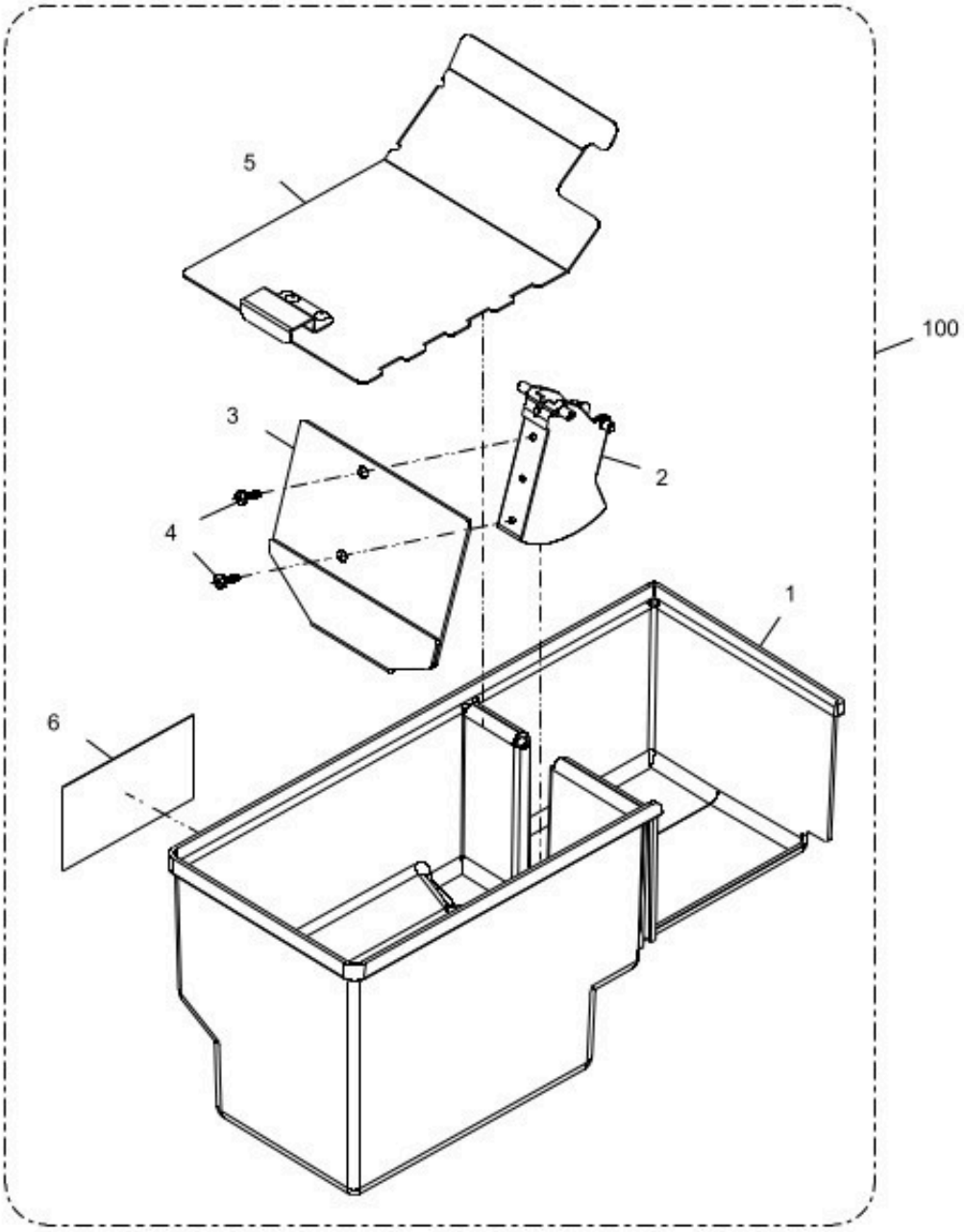

www.rheavendors.com tel: 0039 02 966 551 fax: 0039 02 96 55 086 email: rheavendors@rheavendors.com exclusive property of rheavendors group

COFFEE GROUNDS CONTAINER							
				Preventive Maintenance			
Pos.	Code	Description	Critical	A	B	C	D
1	Z001B185061NA	GROUNDS BIN					
2	Z0010024164-02	GROUNDS EJECTOR	X				
3	Z001B185059	GROUND EJECTION PLATE	X				
4	VIT0002027	SCREW ST HEAD CAP M3.5X13					
5	Z0012400447	COFFEE GROUNDS PAD TRAY COVER					
6	1010100214	STICKER GROUND EJECTOR					
100	Z001B185061CL	§ GROUNDS CONTAINER	X				

www.rheavendors.com tel: 0039 02 966 551 fax: 0039 02 96 55 086 email: rheavendors@rheavendors.com exclusive property of rheavendors group

DRIP TRAY

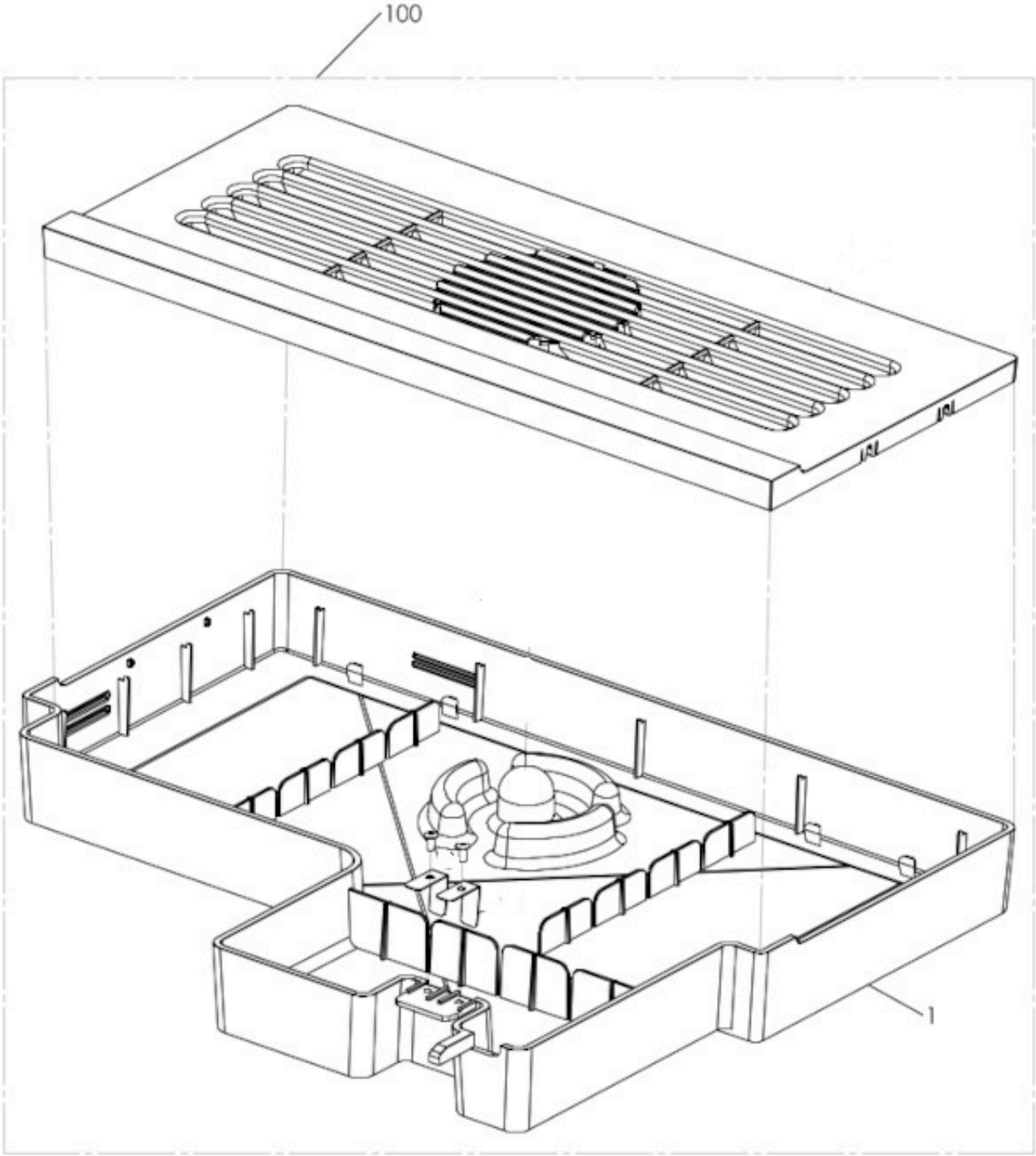

www.rheavendors.com tel: 0039 02 966 551 fax: 0039 02 96 55 086 email: rheavendors@rheavendors.com exclusive property of rheavendors group

DRIP TRAY							
				Preventive Maintenance			
Pos.	Code	Description	Critical	A	B	C	D
1	Z001B185062NAR	§ DRIP TRAY H2O					
100	Z001B185062CL1	§ DRIP TRAY W/O SS RING					

www.rheavendors.com tel: 0039 02 966 551 fax: 0039 02 96 55 086 email: rheavendors@rheavendors.com exclusive property of rheavendors group

COFFEE GROUNDS CHUTE KIT

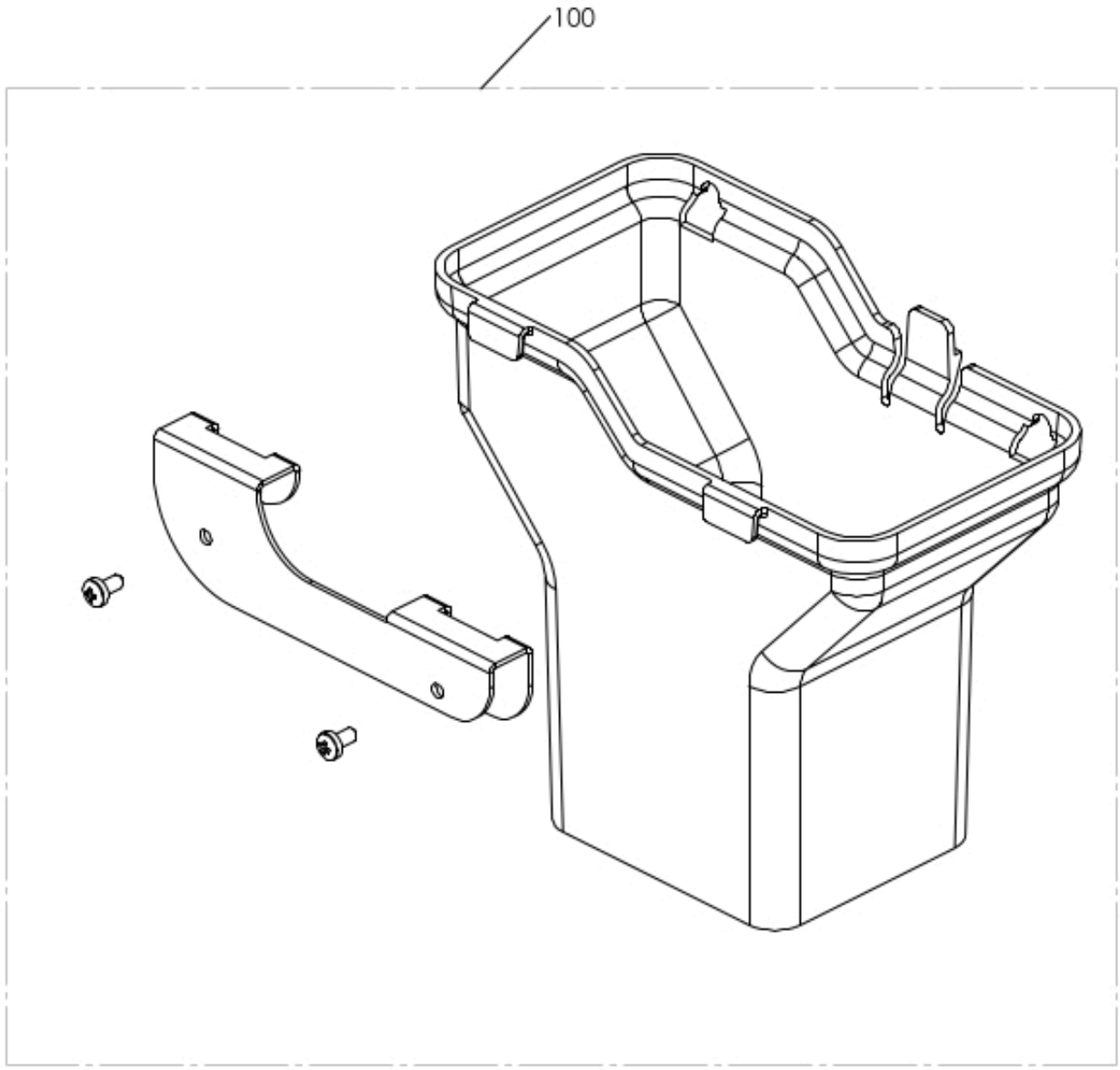

www.rheavendors.com tel: 0039 02 966 551 fax: 0039 02 96 55 086 email: rheavendors@rheavendors.com exclusive property of rheavendors group

COFFEE GROUNDS CHUTE KIT							
				Preventive Maintenance			
Pos.	Code	Description	Critical	A	B	C	D
100	KITB185001	KIT GROUNDS CHUTE rhTT1					

www.rheavendors.com tel: 0039 02 966 551 fax: 0039 02 96 55 086 email: rheavendors@rheavendors.com exclusive property of rheavendors group

RFID KIT

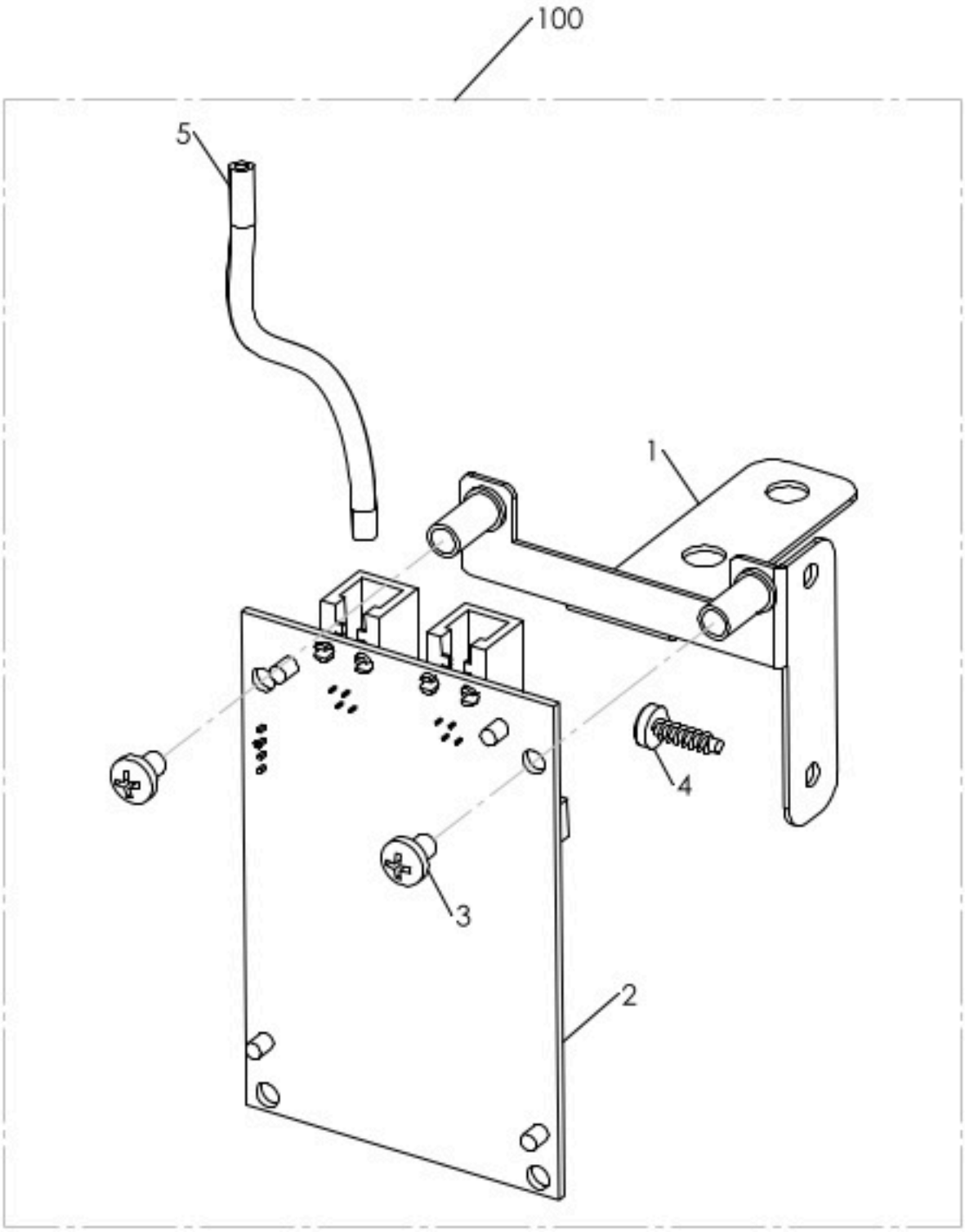

www.rheavendors.com tel: 0039 02 966 551 fax: 0039 02 96 55 086 email: rheavendors@rheavendors.com exclusive property of rheavendors group

RFID KIT							
				Preventive Maintenance			
Pos.	Code	Description	Critical	A	B	C	D
1	Z002B185061	RFID BRACKET					
2	SCH0006261	RFID CARD READER_1	X				
3	VIT0000021	SCREW HEAD TAP CAP M4X6					
4	VIT0002479	SCREW HEAD TAP 3,5X12					
5	ELT0030725	CON.CPU-RFID TELEF.4VIE CM140					
100	Z002B185060R	§ RFID rhTT1					

www.rheavendors.com tel: 0039 02 966 551 fax: 0039 02 96 55 086 email: rheavendors@rheavendors.com exclusive property of rheavendors group

WIRINGS

www.rheavendors.com tel: 0039 02 966 551 fax: 0039 02 96 55 086 email: rheavendors@rheavendors.com exclusive property of rheavendors group

WIRINGS							
				Preventive Maintenance			
Pos.	Code	Description	Critical	A	B	C	D
1	CBLB185047	DOOR INTERFACE WIRING					
2	CBLB185052	ACTUATOR WIRING 230V					
3	CBLB185056	ACTUATOR WIRING 24V					
4	CBLB185049	INTERFACE BRD 5V/24V WIRING					
5	CBLB185055	CPU WIRING 230V					
6	ELT0030483	FLAT CABLE 16P F+F CM43					
7	CBLB185001	DOOR SWITCH WIRING					
8	CBLB185057	MIXER EXTENSION WIRING+EV					
9	CBLB185058	EXTENT VARIFLEX WIRING					
10	CBLB185046	DRIP-TRAY WIRING 100k RESISTOR					
11	CBLB185018	OUT BOILER CLICSON WIRING					
12	CBLB185059	ACUATORS EXTENSION WIRING 24V					
13	CBLB185069	PROBE ADAPTER WIRING					
14	CBLB185060	ACTUATOR EXT. WIRING 230V					
15	CBLB185007	OUT FUSE WIRING					
16	CBLB185008	DOOR SWITCH WIRING					
17	CBLB185010	GROUND-SOCKET WIRING					
18	CBLXS00009	THERMOSTAT EXTENSION WIRING					
19	CBLXS00246	16A SWITCHING POWER WIRING					
20	CBLB166026	LVDS WIRING					
21	CBLB185005	DISPLAY WIRING 24V					
22	ELE0055008	SUPPLY CABLE+PLUG+SCHUK.SOCKET	X				
23	CBLB185048	CUP SENSOR WIRING					
24	CBLXS00319	GROUND WIRING					

www.rheavendors.com tel: 0039 02 966 551 fax: 0039 02 96 55 086 email: rheavendors@rheavendors.com exclusive property of rheavendors group

RETROFIT TOUCH 10" KIT

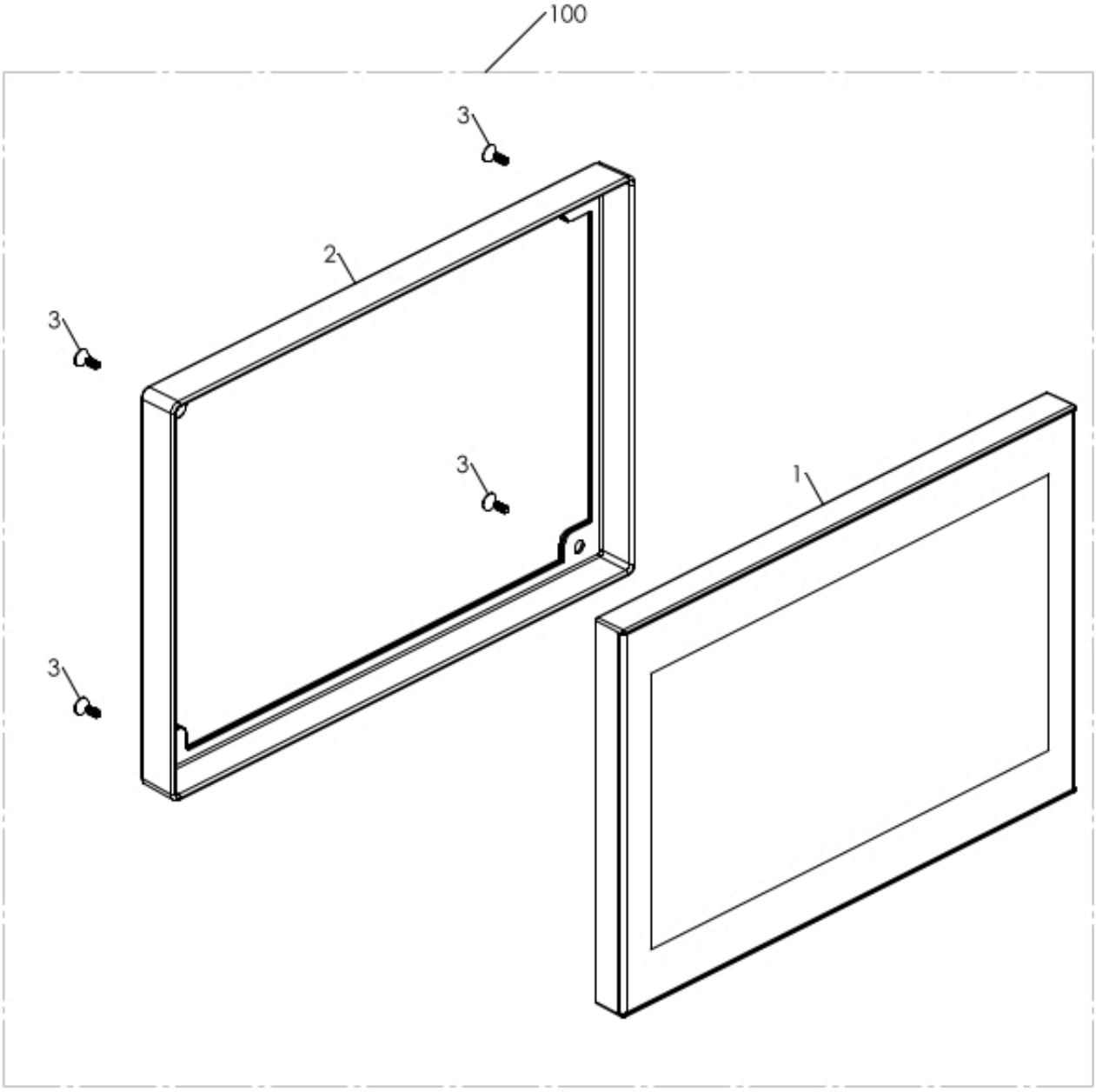

www.rheavendors.com tel: 0039 02 966 551 fax: 0039 02 96 55 086 email: rheavendors@rheavendors.com exclusive property of rheavendors group

RETROFIT TOUCH 10" KIT							
				Preventive Maintenance			
Pos.	Code	Description	Critical	A	B	C	D
1	Z002B185071CL	§TOUCH 10.1"					
2	Z002B185072XC	CHROME COVER DISPLAY 10"					
3	VIT0002129	SCREW TSP 3,50X10					
100	KITB185002	KIT RETROFIT TOUCH 10" rhTT1					

www.rheavendors.com tel: 0039 02 966 551 fax: 0039 02 96 55 086 email: rheavendors@rheavendors.com exclusive property of rheavendors group

STM 32 BOARD

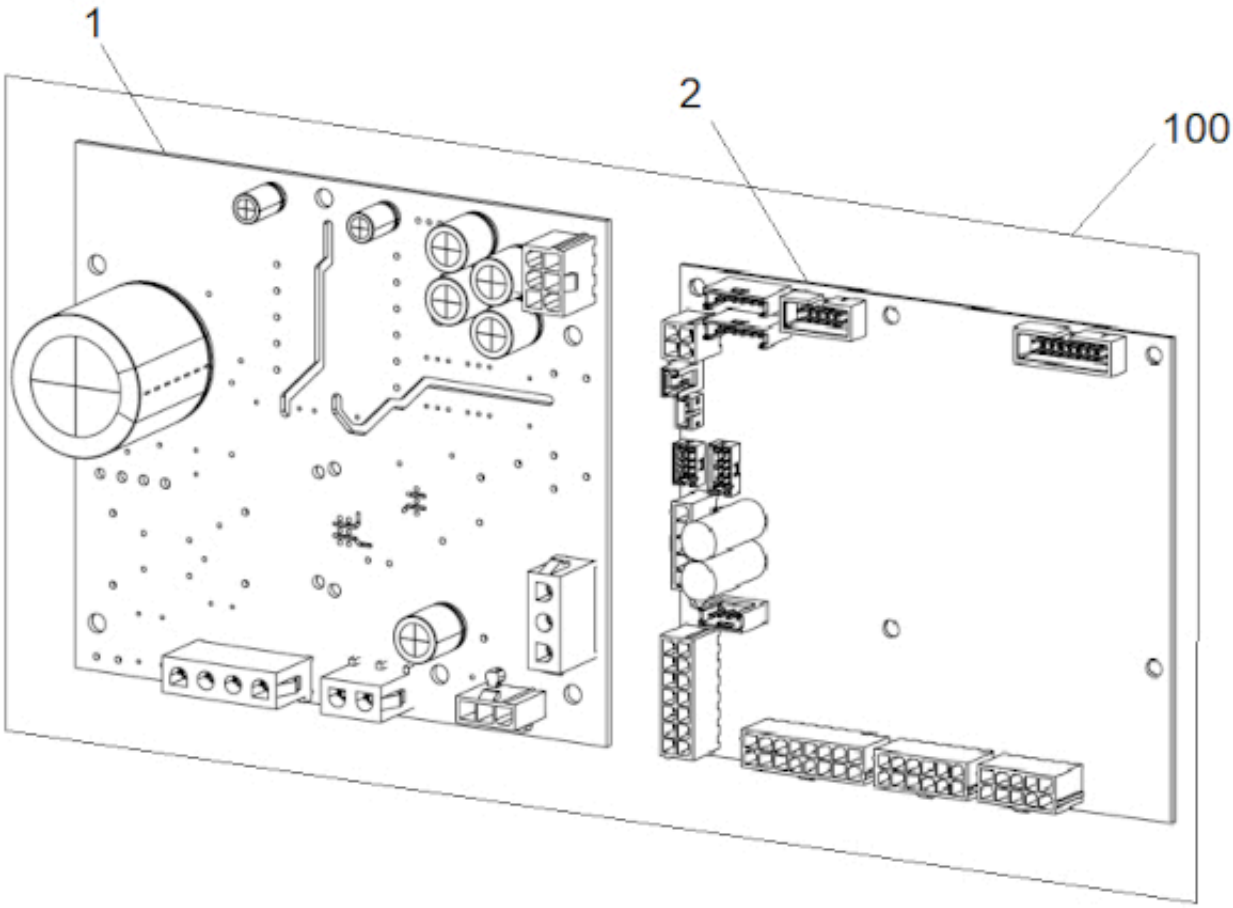

www.rheavendors.com tel: 0039 02 966 551 fax: 0039 02 96 55 086 email: rheavendors@rheavendors.com exclusive property of rheavendors group

STM 32 BOARD							
				Preventive Maintenance			
Pos.	Code	Description	Critical	A	B	C	D
1	BRD05003	POWER BOARD TT 220V	X				
2	BRD03009R-02	§CARRIER BOARD+SOM TT					
100	BRD05003R	§BOARD CARR.+SOM+POWER TT 220V To buy if the distributor is produced before the s/n 20251399999	X				

www.rheavendors.com tel: 0039 02 966 551 fax: 0039 02 96 55 086 email: rheavendors@rheavendors.com exclusive property of rheavendors group

The recommended replacement for key parts in the table below, is especially oriented towards machines installed in locations placed far from the headquarter and infrequently visited.
The numbers have been collected on the basis of field experience and should be taken only as a reference. they are subject to change depending on, local operating conditions and therefore must be adapted to local environments.
The replacement numbers are based on a regular maintenance, as described in the technical manual of the respective machine, and also on a good practice of hygienic cleaning and based on using water-filtering systems to avoid high carbonate hardness and bad water quality.

					Preventive Maintenance				Recommended Spare Parts (considering the number of vending machines) (*1)		
Table	Pos.	Code	Description	Critical	A	B	C	D	1-10	11-50	>51
cabinet	7	Z0090002113R	MR NCJM2480-X 24VDC WITH BOARD	X				X	1	2	2
UPPER COVER	6	ELE0002019	SWITCH 16A 250V	X				CK	1	1	1
UPPER COVER	10	Z0270011109IC	SERVICE KEY RAL2011	X					1	2	2
rear cabinet	5	BRD0700100-00	INTERFACE BOARD	X					1	2	2
DOOR	7	Z002B185042CL-01	§TOUCH 7"	X					1	2	2
DOOR	9	SER0000024	LOCK MM20 + KEY 3374	X					1	1	2
DOOR	12	SCHB169004-01	SMU BOARD	X					1	2	2
DOOR	12	SCHB169004-01	SMU BOARD	X					1	2	2
DOOR	16	Z0020039073NA	CUP SUPPORT PIN BLACK	X2					2	4	4
DOOR	18/a	Z002B185025NA	CUP SUPPORT	X					1	2	2
DOOR	20	Z002B185044	HOT WATER SPEAR W/O TAP	X					1	1	2
DOOR	21	TTEF04/06T	PTFE PIPE 4X6	X	Y	Y	Y	Y	1	1	1
DOOR	23/b	ELTB185001R	§ CUPS SENSOR	X					1	2	2
mixer plan	5	Z0010020836CL	§DRIP TRAY SENSOR	X					1	1	2
mixer plan	8	ELE0001522	MICROSWITCH	X					1	2	2
mixer plan	11	ELE0000932	PROBE	X					1	1	2
mixer plan	14	ELE0000467-02	FAN HEATER 24V DC + BOARD	X					1	1	2
mixer plan	19	Z0090002250R	§ VARIFLEX BREW. GEARBOX MOTOR	X			CK	X	1	1	2
mixer plan	23	Z0010025153NA	EXTRACTOR TUBE 20MM CONNECTOR			CK	CK				
mixer plan	27	Z0080200103CPG	MIXING BOWL F.W/H20 BREAKER	X	Y	Y	Y	Y	2	4	4
mixer plan	28	Z0080100006IC	LOCK RING RAL2011	X					5	10	10

www.rheavendors.com tel: 0039 02 966 551 fax: 0039 02 96 55 086 email: rheavendors@rheavendors.com exclusive property of rheavendors group

					Preventive Maintenance				Recommended Spare Parts (considering the number of vending machines) (*1)		
Table	Pos.	Code	Description	Critical	A	B	C	D	1-10	11-50	>51
mixer plan	29	Z008B185010PG	UPPER RING RAL5012	X					2	4	4
mixer plan	30/b	TSIL06/09PG-50	SILICON HOSE D6X9 R5012 MT.50	X					1	1	2
mixer plan	31	Z0010020052	PRODUCT NOZZLE	X	Y	Y	Y	Y	2	4	6
mixer plan	33	Z0080200101LPG	BLUE LEFT MIX.BODY H2O W/BREAK	X	Y	Y	Y	Y	2	4	4
mixer plan	36	Z0020039533	SPOUT DELIVERY 30° D.6	X					1	2	2
mixer plan	42	TEOL000001CL7	EXTRACTOR TUBE D.20 130MM	X				X	1	2	2
mixer plan	45	Z007B185006NA	UNIVERSAL PIPE SUPPORT	X					1	2	2
mixer	2	Z0080100015	MIXER BUSH	X					5	10	10
mixer	3	GUA0000084	OR 3131 RED SILICONE A60	X	Y	Y	Y	Y	10	20	20
mixer	4	Z0090003023	MIXER MOTOR 24V DC SHAFT D.4	X				X	5	10	10
mixer	6	Z0080100009IC	MIXER MOTOR SUPPORT RAL2011	X					1	2	2
mixer	7	Z0080100102	MIXER SHAFT GASKET	X	CK	Y	Y	Y	1	1	2
mixer	8	Z0080100011	MIXER FAN	X	CK	Y	Y	Y	10	20	20
mixer	100	Z0080100001R	§ MIXER BOWL BASE+MOTOR	X					5	10	10
SOLUBLES VALVES	2	Z0110001141	EV 2Vx2 DN2 G1/8 F A.R. 24VDC	X			X		1	1	2
SOLUBLES VALVES	4	Z0110001134	VALVE BLOCK 3V 2W 24V DC	X			X		1	1	2
SOLUBLES VALVES	5	TTEF04/06T	PTFE PIPE 4X6	X	Y	Y	Y	Y	1	1	1
SOLUBLES VALVES	6	Z0100001156	FITTING ELBOW D6-D6	X					2	4	4
SOLUBLES VALVES	7	Z008B185013MD	EV MIXER THR.NOZZLE Ø5 GREEN	X					1	2	2
SOLUBLES VALVES	8	GUA0000085	OR 106 RED SILICONE A70	X	Y*	Y*	Y*	Y*	10	20	20
SOLUBLES VALVES	9	Z008B185013NA	EV MIXER THR.NOZZLE Ø5 BLACK	X					1	2	2
SOLUBLES VALVES	10	Z008B185013PL	EV MIXER THR.NOZZLE Ø5 BLUE	X					1	2	2
HYDRIC CIRCUIT	4	Z0600019850	§ BOILER L. 0,5 1500W 230V	X					2	2	4
HYDRIC CIRCUIT	5	ELE0000975	PROBE	X	CK	CK	CK	CK	1	2	2
HYDRIC CIRCUIT	7	TTEF04/06T	PTFE PIPE 4X6	X	Y	Y	Y	Y	1	1	1
HYDRIC CIRCUIT	8	Z0100001238	ELBOW CONNECTOR	X							
HYDRIC CIRCUIT	9	Z060B185111NA	3 WAYS SUPPORT	X					2	2	4
HYDRIC CIRCUIT	11	Z011B185023	VALVE 3/2 24V+BOARD PWM	X		CK	X		2	4	6
HYDRIC CIRCUIT	12/a	TSIL05/08T-10	SILICON HOSE 5X8 MT.10	X	Y	Y	Y	Y	1	1	2
HYDRIC CIRCUIT	14	Z0250014086R7	§WATER INLET TUBE 0,09 mt	X					2	4	4
HYDRIC CIRCUIT	15	Z0110001058	WATER INLET VALVE 24V DC	X		CK		X	1	2	3
HYDRIC CIRCUIT	16/a	TSIL04/06T-10	SILICON HOSE 4X6 MT.10	X	Y	Y	Y	Y	1	1	2
HYDRIC CIRCUIT	18	Z0600016455	H2O OUTLET PLUG	X					1	1	2
HYDRIC CIRCUIT	19	Z0110007003	VOLUMETRIC COUNTER	X	CK	CK	CK	X	1	1	2
HYDRIC CIRCUIT	23	Z011B185001	NO RETURN VALVE	X					1	2	2
HYDRIC CIRCUIT	28	Z011B185022	VALVE 2 WAY 24DC	X					2	2	4
water inlet panel	2	Z0110020007	PLASTIC FILTER DIAM. 20	X			X		1	1	1
water inlet panel	3/a	TSIL07/11T-10	SILICON HOSE 7X11 MT.10	X	Y	Y	Y	Y	1	1	2
water inlet panel	6	Z0800009211	ELBOW CONNECTOR	X				X	1	1	2
water inlet panel	7	GUA0000043	OR 109 NBR AL 75 BLACK	X				X	2	2	4
water inlet panel	8/a	TSIL06/11T-10	SILICON HOSE 6X11 MT.10	X	Y	Y	Y	Y	1	1	2
water inlet panel	10	Z0800013046	AIR BREAK WASTE FLOAT	X					1	1	2
water inlet panel	11	GUA0000082	SILICON GASKET D.6	X		CK		CK	1	2	2
water inlet panel	12	ELE0001514	MICROSWITCH 3A 125-250VA	X			CK	X	1	2	2
COFFEE PUMP	2/a	Z0110004065	PUMP PLUS PGØ7 230V-50HZ	X		CK	X		1	2	2

www.rheavendors.com tel: 0039 02 966 551 fax: 0039 02 96 55 086 email: rheavendors@rheavendors.com exclusive property of rheavendors group

					Preventive Maintenance				Recommended Spare Parts (considering the number of vending machines) (*1)		
Table	Pos.	Code	Description	Critical	A	B	C	D	1-10	11-50	>51
COFFEE PUMP	2/b	Z0110004067	PUMP EP5 220V 60HZ	X		CK	X		1	2	2
COFFEE PUMP	3	Z0110004023	CONNECTOR	X					1	2	2
COFFEE PUMP	4/a	TSIL05/08T-10	SILICON HOSE 5X8 MT.10	X	Y	Y	Y	Y	1	1	2
COFFEE PUMP	6	Z0100003022	T CONNECTOR 461 TS UL	X					2	1	2
COFFEE PUMP	7	Z0110001151R	VALVE 3W W/BY-PASS 11BAR	X		CK	X*		1	2	3
COFFEE PUMP	8	TTEF04/06T	PTFE PIPE 4X6	X	Y	Y	Y	Y	1	1	1
COFFEE PUMP	9	ELE0000915	PUMP THERMOPROTECTOR	X					1	1	1
GRINDER	4	VIT0009325	BEARING	X				CK	1	1	2
GRINDER	9	Z0320001704	GRINDER ROTATION PIN REINFORCE	X		CK	CK	CK	10	20	20
GRINDER	11	Z0320001636	EJECTOR	X			CK		1	1	2
GRINDER	13	Z0320001680	CONIC BLADES PLUS	X		CK		X	1	1	2
GRINDER	20	GUA0000124	SILICONE OR 2137	X		X			1	2	2
GRINDER	26	Z0090003047	GRINDER MOTOR 230V DC	X				CK	1	2	2
GRINDER	28	Z032B185001IC	GRINDER CHUTE	X					1	1	2
GRINDER	29	TSIL15/19PG-50	SILICON HOSE 15X19 R5012 MT.50	X					1	1	2
VARIGRIND	3	VIT0009325	BEARING	X				CK	1	1	2
VARIGRIND	4	Z0320001608R	TRANSMISSION WHEEL	X				CK	1	2	2
VARIGRIND	7	Z0320001704	GRINDER ROTATION PIN REINFORCE	X		CK	CK	CK	10	20	20
VARIGRIND	8	Z0320001636	EJECTOR	X			CK		1	1	2
VARIGRIND	10	Z0320001680	CONIC BLADES PLUS	X		CK		X	1	1	2
VARIGRIND	16	GUA0000124	SILICONE OR 2137	X		X			1	2	2
VARIGRIND	24	Z0090003047	GRINDER MOTOR 230V DC	X				CK	1	2	2
VARIGRIND	27	Z032B185001IC	GRINDER CHUTE	X					1	1	2
VARIGRIND	32	Z0090002042R	§ GEAR MOTOR 2,2RPM24VDC+FILT	X					1	1	1
VARIGRIND	33	SCH0003740	MOTOR FILTER	X					1	2	2
VARIGRIND	41	Z0320001657	GRINDER BELT	X					1	1	2
VARIGRIND	43	TSIL15/19PG-50	SILICON HOSE 15X19 R5012 MT.50	X					1	1	2
GRINDER COVER	2	Z0230015307NA	BUTTON BLACK	X					1	2	2
GRINDER COVER	3	CBLB185022	MICRO SWITCH W/CABLE	X					1	2	2
PROFESSIONAL BREWER GROUP D.45	A	Z0250014008R	§ CHUTE D. 45	X					1	1	2
PROFESSIONAL BREWER GROUP D.36	A	Z0250014033R	§ CHUTE D. 36	X					1	1	2
PROFESSIONAL BREWER GROUP D.45	C	Z0250014045R	§ UPPER FILTER HOLDER D.45	X							
PROFESSIONAL BREWER GROUP D.36	C	Z0250014040R	§ UPPER FILTER HOLDER D.36	X							
PROFESSIONAL BREWER GROUP D.36	E	Z0250014030R	§ CHAMBER D.36	X							
PROFESSIONAL BREWER GROUP D.45	E	Z0250014020R	§ INFUSION CHAMBER D.45	X							
PROFESSIONAL BREWER GROUP D.36	F	Z0250014034R	§ BRUSH D.36	X	X	X	X	X	1	2	2
PROFESSIONAL BREWER GROUP D.45	F	Z0250014024R	§ BRUSH D.45	X	X	X	X	X	1	2	2
PROFESSIONAL BREWER GROUP D.36	G	Z0250014032R	§ INFUSION CHAMBER D.36	X							
PROFESSIONAL BREWER GROUP D.45	G	Z0250014022R	§ INFUSION CHAMBER D.45	X							
PROFESSIONAL BREWER GROUP D.45	H	Z0250014028R	§ LOWER FILTER HOLDER D.45	X							
PROFESSIONAL BREWER GROUP D.36	H	Z0250014038R	§ LOWER FILTER HOLDER D.36	X							
PROFESSIONAL BREWER GROUP D.36	3	VIT0009320	BEARING	X				CK	1	1	2
PROFESSIONAL BREWER GROUP D.45	3	VIT0009320	BEARING	X				CK	1	1	2
PROFESSIONAL BREWER GROUP D.36	4	VIT0009318	SPACER WASHER	X				CK	2	2	4
PROFESSIONAL BREWER GROUP D.45	4	VIT0009318	SPACER WASHER	X				CK	2	2	4

www.rheavendors.com tel: 0039 02 966 551 fax: 0039 02 96 55 086 email: rheavendors@rheavendors.com exclusive property of rheavendors group

					Preventive Maintenance				Recommended Spare Parts (considering the number of vending machines) (*1)		
Table	Pos.	Code	Description	Critical	A	B	C	D	1-10	11-50	>51
PROFESSIONAL BREWER GROUP D.36	5	VIT0009317	BEARING	X				CK	2	2	4
PROFESSIONAL BREWER GROUP D.45	5	VIT0009317	BEARING	X				CK	2	2	4
PROFESSIONAL BREWER GROUP D.45	6	GUA0001007	V RING GASKET VA16	X				CK	1	1	2
PROFESSIONAL BREWER GROUP D.36	6	GUA0001007	V RING GASKET VA16	X				CK	1	1	2
PROFESSIONAL BREWER GROUP D.36	10	Z0250014081	SPRING	X					1	2	2
PROFESSIONAL BREWER GROUP D.45	10	Z0250014081	SPRING	X					1	2	2
PROFESSIONAL BREWER GROUP D.36	18	GUA0000045	OR 108 VITON 80 BLACK	X	CK	Y*	Y*	Y*	1	2	2
PROFESSIONAL BREWER GROUP D.45	18	GUA0000045	OR 108 VITON 80 BLACK	X	CK	Y*	Y*	Y*	1	2	2
PROFESSIONAL BREWER GROUP D.36	19	Z0250014048	SPRING	X	CK	X2	X2	X2	2	4	4
PROFESSIONAL BREWER GROUP D.45	19	Z0250014048	SPRING	X	CK	X2	X2	X2	2	4	4
PROFESSIONAL BREWER GROUP D.45	20	GUA0000097	OR 4131 RED SILICONE LSR70	X	CK	Y*	Y*	Y*	1	2	2
PROFESSIONAL BREWER GROUP D.36	20	GUA0000080	OR 4112 RED SILICONE LSR70	X	CK	Y*	Y*	Y*	1	2	2
PROFESSIONAL BREWER GROUP D.36	21	Z0250008099	COFFEE FILTER 33,4	X	CK	Y	Y	Y	1	2	2
PROFESSIONAL BREWER GROUP D.45	21	Z0250008211	COFFEE FILTER 37,3	X	CK	Y	Y	Y	1	2	2
PROFESSIONAL BREWER GROUP D.36	27	GUA0000004	OR 104 NBR AL 75 BLACK	X	CK	X	X	X	1	2	2
PROFESSIONAL BREWER GROUP D.45	27	GUA0000004	OR 104 NBR AL 75 BLACK	X	CK	X	X	X	1	2	2
PROFESSIONAL BREWER GROUP D.36	32	GUA0000103	OR 3075 SILICON	X	CK	Y*	Y*	Y*	1	2	2
PROFESSIONAL BREWER GROUP D.45	32	GUA0000103	OR 3075 SILICON	X	CK	Y*	Y*	Y*	1	2	2
PROFESSIONAL BREWER GROUP D.45	33	GUA0000097	OR 4131 RED SILICONE LSR70	X	CK	Y*	Y*	Y*	1	2	2
PROFESSIONAL BREWER GROUP D.36	33	GUA0000080	OR 4112 RED SILICONE LSR70	X	CK	Y*	Y*	Y*	1	2	2
PROFESSIONAL BREWER GROUP D.36	34	Z0250008019	COFFEE FILTER	X	CK	Y	Y	Y	1	2	2
PROFESSIONAL BREWER GROUP D.45	34	Z0250014029	COFFEE FILTER DIAM. 37.3	X	CK	Y	Y	Y	1	2	2
PROFESSIONAL BREWER GROUP D.36	37	VIT0009320	BEARING	X				CK	1	1	2
PROFESSIONAL BREWER GROUP D.45	37	VIT0009320	BEARING	X				CK	1	1	2
PROFESSIONAL BREWER GROUP D.36	100	Z0250014060CL	§ COFFEE BREWER VARIFLEX D.36	X					1	2	2
PROFESSIONAL BREWER GROUP D.45	100	Z0250014000CL	COFFEE BREWER VARIFLEX D 45	X					1	2	2
control panel	2	ELE0003508CL	FUSE HOLDER+FUSE 12A	X					2	2	4
control panel	4	ELE0002014	BIPOLAR SWITCH 15A 250V	X					1	1	1
control panel	6	ELE0002310	MAINS SOCKET IEC 250V 15A	X					1	1	1
control panel	8	ELE0009066	NOISE FILTER 16A	X					1	1	2
ASPIRATION FAN	2	ELE0000462	FAN 24V DC-LOW SPEED	X			X		1	1	2
products container	1/a	Z0230030506R	§ CANIS. 54-190 WHEEL18 W/LID	X				X	1	1	2
products container	1/b	Z0230030502R	§ CANIS. 54-190 WHEEL9 W/LID	X				X	1	1	2
products container	1/c	Z0230030503R	§ CANIS. 54-190 AGIT.9 W/LID	X					1	1	2
products container	1/d	Z0230030507R	§ CANIS. 54-190 AGIT.18 W/LID	X					1	1	2
products container	3/a	Z0230030525R	§ CAN. 110-190 AGIT.18 W/LID-L	X				X	1	1	2
products container	3/b	Z0230030522R	§ CAN. 110-190 AGIT.18 W/LID-R	X				X	1	1	2
products container	3/c	Z0230030524R	§ CAN. 110-190 AGIT.9 W/LID-L	X					1	1	2
products container	3/d	Z0230030521R	§ CAN. 110-190 AGIT.9 W/LID-R	X					1	1	2
products container	7/a	Z0230030058R	§ INGRED. CHUTE-RIGHT ORANGE	X	Y	Y	Y	Y	1	2	2
products container	7/b	Z0230030044R	§ INGREDIENT CHUTE-RIGHT RED	X	Y	Y	Y	Y	1	1	2
products container	8/a	Z0230030057R	§ INGREDIENT CHUTE-LEFT ORANGE	X	Y	Y	Y	Y	1	2	2
products container	8/b	Z0230030043R	§ INGREDIENT CHUTE-LEFT RED	X	Y	Y	Y	Y	1	1	2
coffee beans container	100	Z0230015300R1	COFFEE BEANS HOPPER	X	Y	Y	Y	Y			
COFFEE GROUNDS CONTAINER	2	Z0010024164-02	GROUNDS EJECTOR	X					1	2	2

www.rheavendors.com tel: 0039 02 966 551 fax: 0039 02 96 55 086 email: rheavendors@rheavendors.com exclusive property of rheavendors group

					Preventive Maintenance				Recommended Spare Parts (considering the number of vending machines) (*1)		
Table	Pos.	Code	Description	Critical	A	B	C	D	1-10	11-50	>51
COFFEE GROUNDS CONTAINER	3	Z001B185059	GROUND EJECTION PLATE	X					1	2	2
COFFEE GROUNDS CONTAINER	100	Z001B185061CL	§ GROUNDS CONTAINER	X					1	2	2
RFID KIT	2	SCH0006261	RFID CARD READER_1	X					1	1	1
WIRINGS	22	ELE0055008	SUPPLY CABLE+PLUG+SCHUK.SOCKET	X					1	2	2
STM 32 BOARD	1	BRD05003	POWER BOARD TT 220V	X					1	1	2
STM 32 BOARD	100	BRD05003R	§BOARD CARR.+SOM+POWER TT 220V	X					1	1	2

www.rheavendors.com tel: 0039 02 966 551 fax: 0039 02 96 55 086 email: rheavendors@rheavendors.com exclusive property of rheavendors group

www.rheavendors.com tel: 0039 02 966 551 fax: 0039 02 96 55 086 email: rheavendors@rheavendors.com exclusive property of rheavendors group