vending machine

spare parts manual

www.rheavendors.com tel: 0039 02 966 551 fax: 0039 02 96 55 086 email: rheavendors@rheavendors.com exclusive property of rheavendors group

cabinet

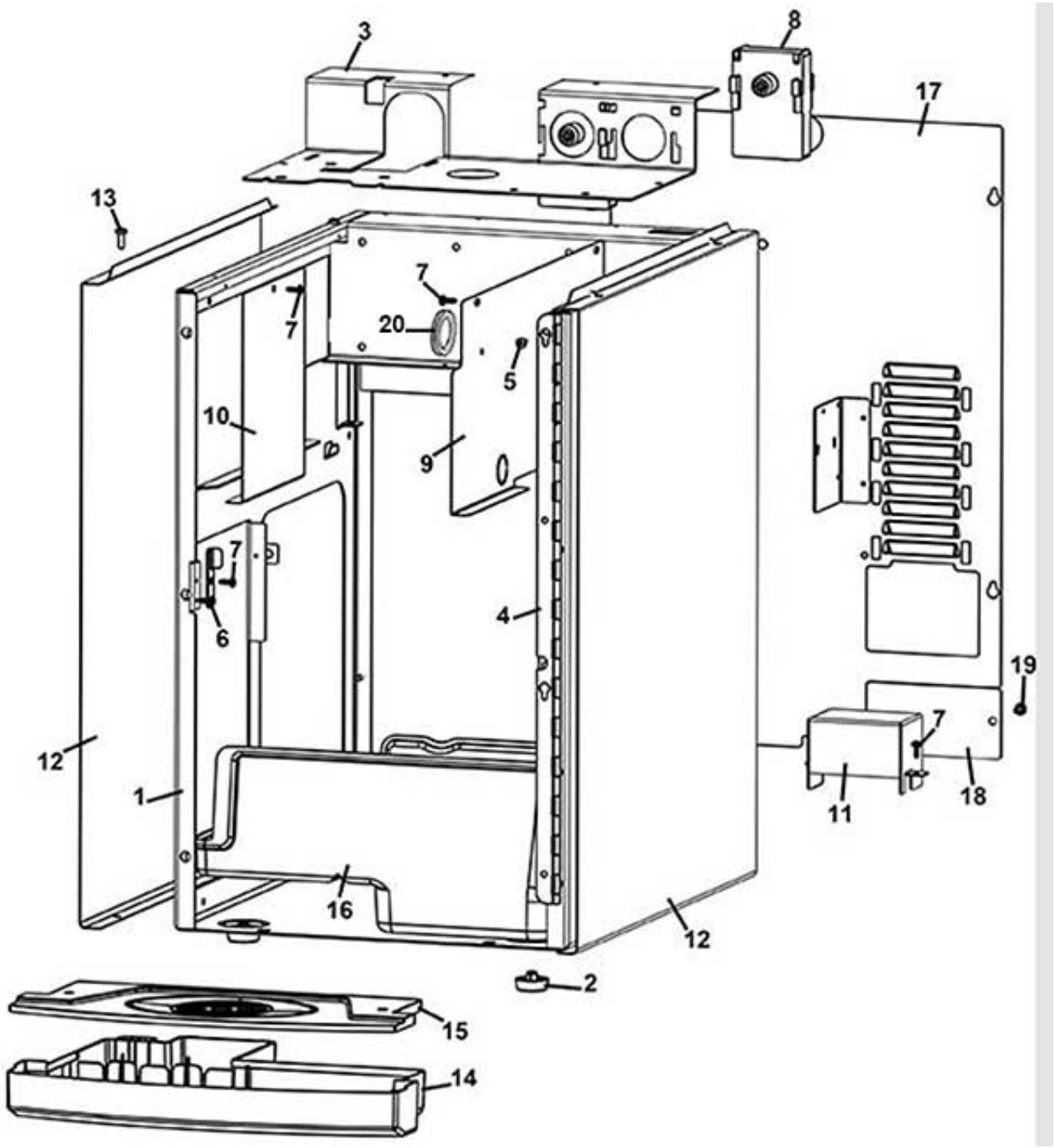

www.rheavendors.com tel: 0039 02 966 551 fax: 0039 02 96 55 086 email: rheavendors@rheavendors.com exclusive property of rheavendors group

cabinet		
Pos.	**Code**	**Description**
1	Z0010028249NA-05	CABINET (BLACK)
2	GUA0011011	MACHINE FOOT D.25
3	Z0010028254NA	GEAR MOTOR PLATE
4	Z0010028153-03	DOOR HINGE
5	VIT0002010	SCREW ST HEAD CAP M3.5X9.5
6	Z0010028284	DOOR CLOSING
7	VIT0002401	SCREW ST HEAD CAP M3.5X9.5
8	Z0090002113	MOTOR 24 DC 97 RPM
9	Z0010028177NA	RIGHT COVER
10	Z0010028244NA	LEFT COVER
11	Z0010028237	OUTLET COVER eC
12	Z0010028243NA	RIGHT-LEFT SIDE (BLACK)
13	VIT0000012	SCREW HEAD TAP CAP M4X10
14	Z0010028282CL	H2O DRIP TRAY
15	Z0010028281CM	H2O DRIP TRAY GRID RAL 9006
16	Z0010028012NA	GROUNDS HOPPER
17	Z0010028172-03NA	REAR COVER RAL 9005
18	Z0010028239-01NA	BOILER OUTLET REAR DOOR BLACK
19	4060010126	PAYM SYSTEM FIXING SCREW
20	GUA0010503	ELECTRICAL GROMMET DG 29

www.rheavendors.com tel: 0039 02 966 551 fax: 0039 02 96 55 086 email: rheavendors@rheavendors.com exclusive property of rheavendors group

cabinet (Plumbed version)

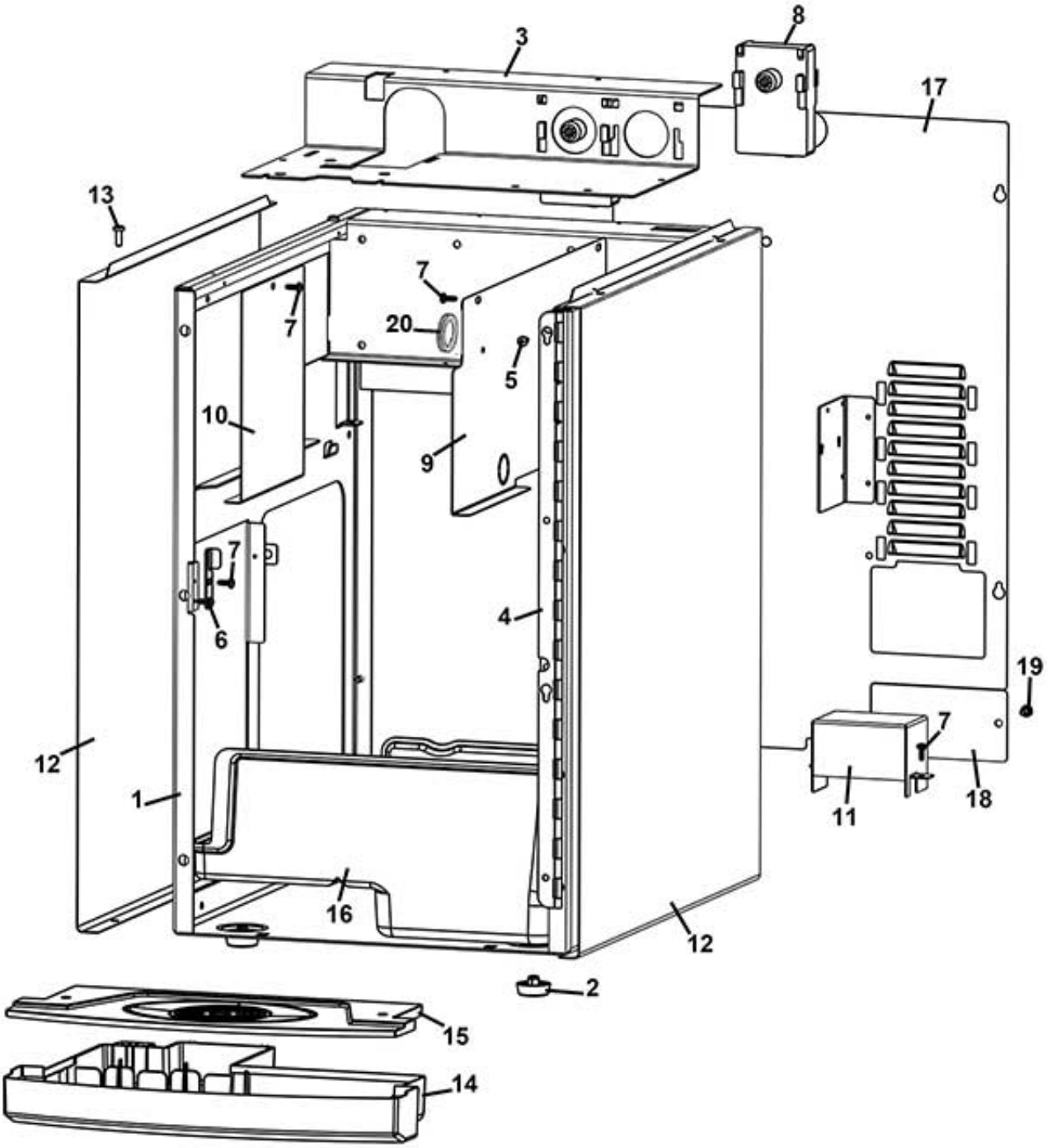

www.rheavendors.com tel: 0039 02 966 551 fax: 0039 02 96 55 086 email: rheavendors@rheavendors.com exclusive property of rheavendors group

cabinet (Plumbed version)		
Pos.	**Code**	**Description**
1	Z0010028249NA-05	CABINET (BLACK)
2	GUA0011011	MACHINE FOOT D.25
3	Z0010028252NA	GEAR MOTOR PLATE
4	Z0010028153-03	DOOR HINGE
5	VIT0002010	SCREW ST HEAD CAP M3.5X9.5
6	Z0010028284	DOOR CLOSING
7	VIT0002401	SCREW ST HEAD CAP M3.5X9.5
8	Z0090002113	MOTOR 24 DC 97 RPM
9	Z0010028177NA	RIGHT COVER
10	Z0010028244NA	LEFT COVER
11	Z0010028237	OUTLET COVER eC
12	Z0010028243NA	RIGHT-LEFT SIDE (BLACK)
13	VIT0000012	SCREW HEAD TAP CAP M4X10
14	Z0010028282CL	H2O DRIP TRAY
15	Z0010028281CM	H2O DRIP TRAY GRID RAL 9006
16	Z0010028012NA	GROUNDS HOPPER
17	Z0010028172-03NA	REAR COVER RAL 9005
18	Z0010028239-01NA	BOILER OUTLET REAR DOOR BLACK
19	4060010126	PAYM SYSTEM FIXING SCREW
20	GUA0010503	ELECTRICAL GROMMET DG 29

www.rheavendors.com tel: 0039 02 966 551 fax: 0039 02 96 55 086 email: rheavendors@rheavendors.com exclusive property of rheavendors group

UPPER COVER

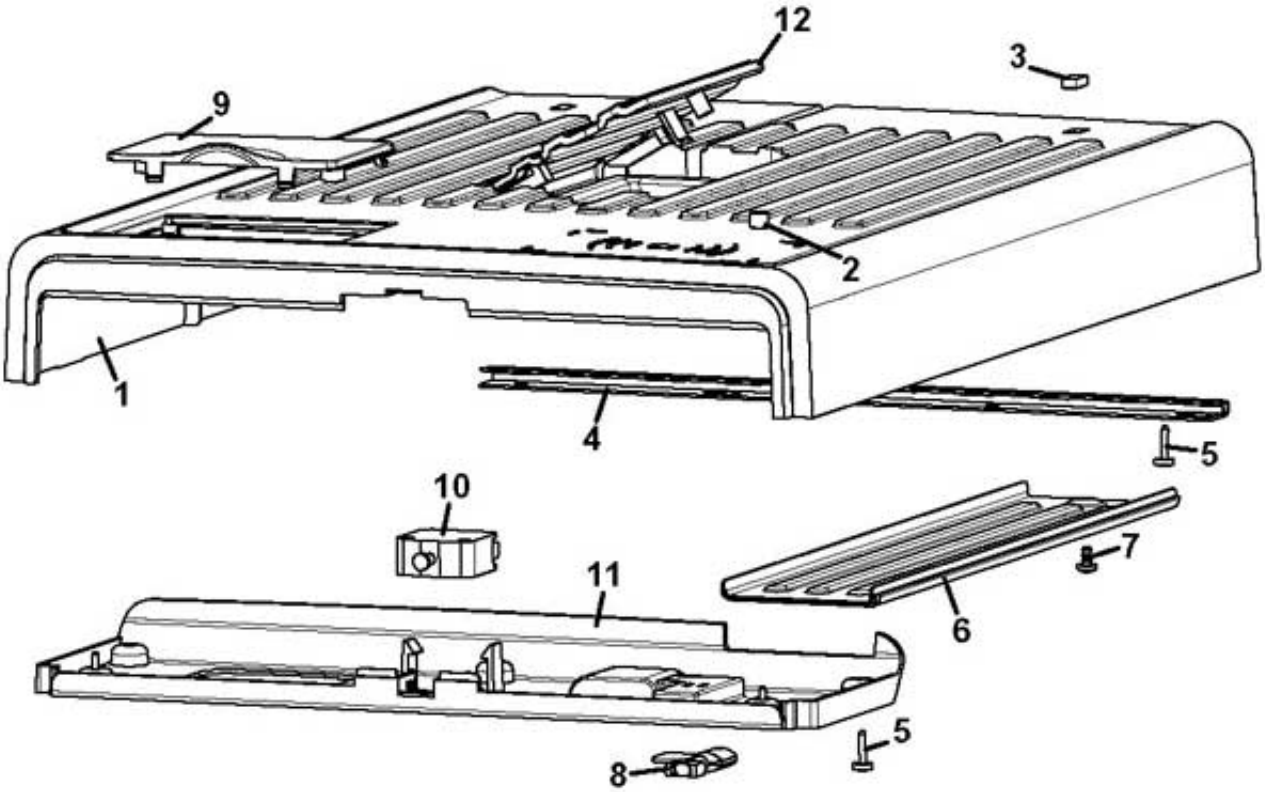

www.rheavendors.com tel: 0039 02 966 551 fax: 0039 02 96 55 086 email: rheavendors@rheavendors.com exclusive property of rheavendors group

UPPER COVER		
Pos.	**Code**	**Description**
1	Z0010028276CM	UPPER COVER RAL 9006
2	Z0010027344	RING PLUG
3	Z0010027343	PLUG SUPPORT COVER
4	Z0010028158	UPPER HINGE LID
5	VIT0002469	SCREW HEAD TAP M3.5X10
6	Z0010028280CG	CABLE COVER 7035
7	VIT0002009	SCREW ST HEAD CAP M3.5X6.5
8	Z0270011109IC	SERVICE KEY RAL2011
9	Z0010028279CM	DEKA LID RAL 9006
10	ELE0002019	SWITCH 16A 250V
11	Z0010028277CG	UPPER COVER CLOSING RAL 7035
12	Z0010028283CM	COVER (RAL 9006)

www.rheavendors.com tel: 0039 02 966 551 fax: 0039 02 96 55 086 email: rheavendors@rheavendors.com exclusive property of rheavendors group

rear cabinet (Unplumbed version)

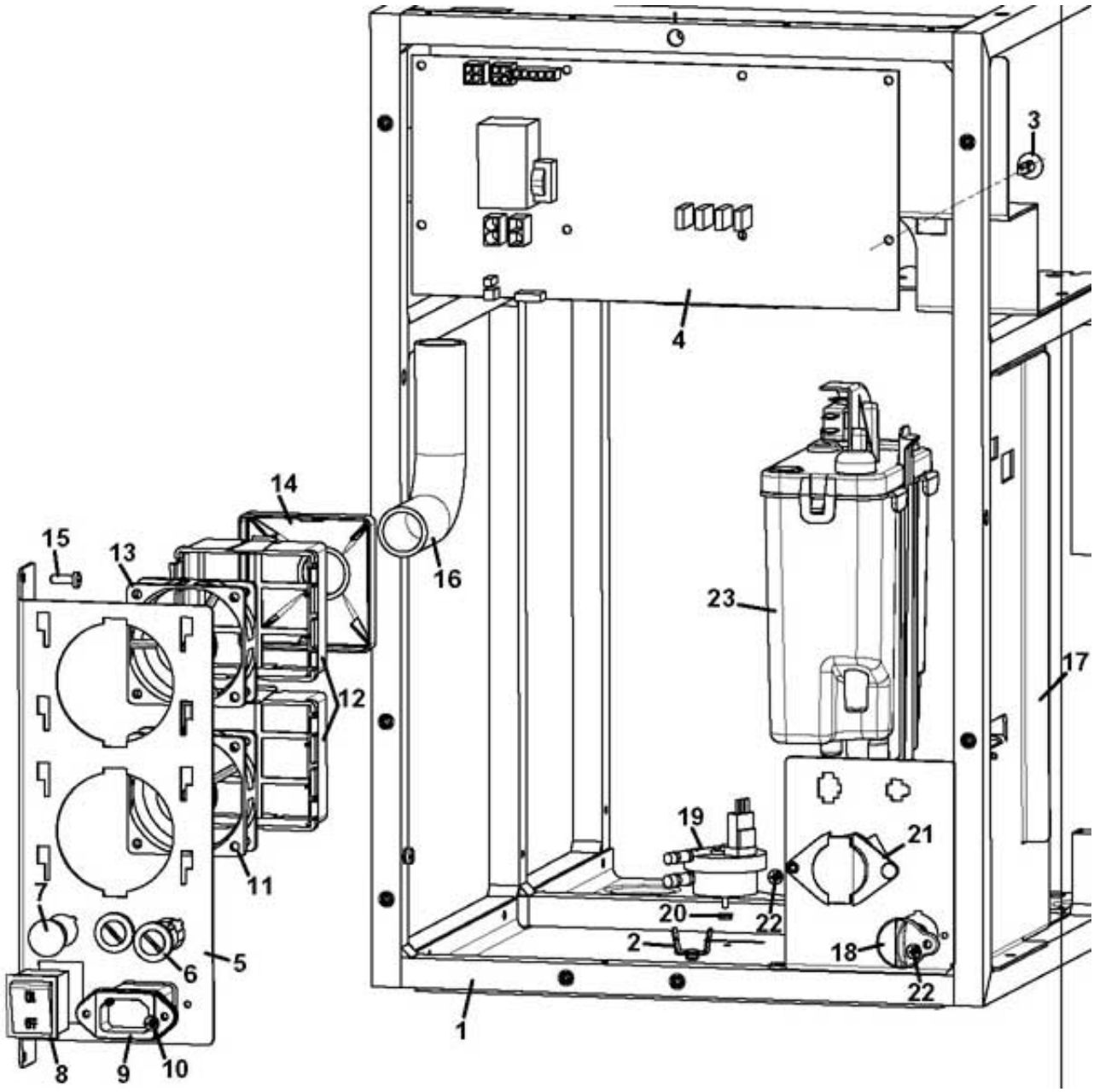

www.rheavendors.com tel: 0039 02 966 551 fax: 0039 02 96 55 086 email: rheavendors@rheavendors.com exclusive property of rheavendors group

rear cabinet (Unplumbed version)		
Pos.	**Code**	**Description**
1	Z0010028249NA-05	CABINET (BLACK)
2	ELE0060520	GROUND PIN
3	ELE0062020	BOARD SUPPORT
4	SCH0008964-01	CPU/POWER BOARD
5	Z0130013061-03	ELECTRIC COMPONENT SUPP.
6	ELE0003508CL	FUSE HOLDER+FUSE 12A
7	GUA0011010	PLUG
8	ELE0002014CL3	BIPOLAR SWITCH 15A 250V
9	ELE0002315	MAINS SOCKET 115/250V 10A
10	VIT0002010	SCREW ST HEAD CAP M3.5X9.5
11	ELE0000462	FAN 24V DC-LOW SPEED
12	Z0010027064	FAN SUPPORT
13	ELE0000461	FAN 24V DC-HIGH SPEED
14	Z0010027065	FAN CONNECTOR
15	VIT0002401	SCREW ST HEAD CAP M3.5X9.5
16	TEOL000001CL1	EXTRACTOR TUBE D.20 170MM
17	Z0010028248-09	HYDRAULIC HOLDER
18	Z0600016455	H2O OUTLET PLUG
19	Z0110007003	VOLUMETRIC COUNTER
20	GUA0010551	ELECTRICAL GROMMET
21	Z0010020839	INLET H2O VALVE PLUG
22	VIT0002009	SCREW ST HEAD CAP M3.5X6.5
23		See table water inlet panel

www.rheavendors.com tel: 0039 02 966 551 fax: 0039 02 96 55 086 email: rheavendors@rheavendors.com exclusive property of rheavendors group

rear cabinet (Plumbed version)

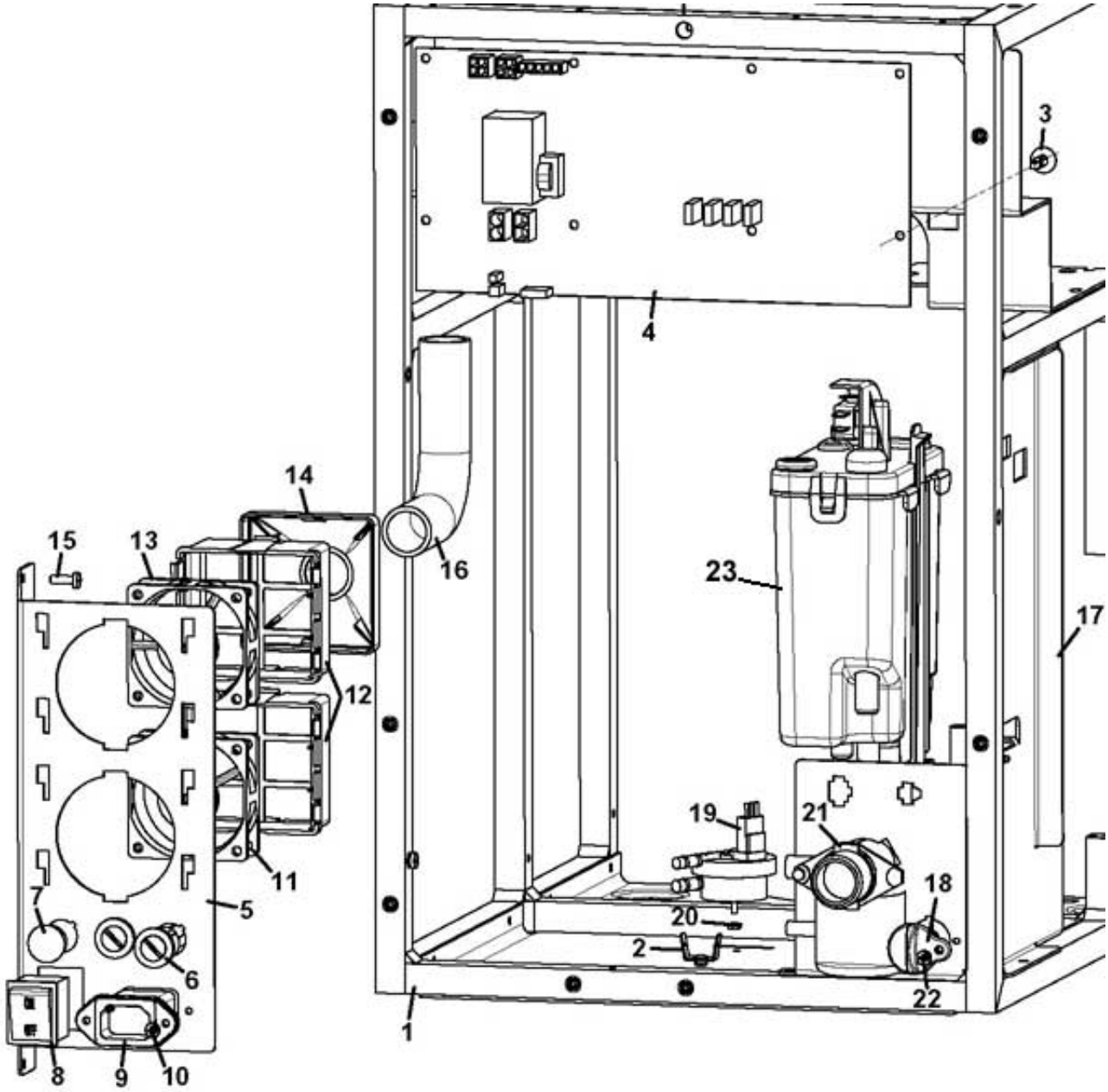

www.rheavendors.com tel: 0039 02 966 551 fax: 0039 02 96 55 086 email: rheavendors@rheavendors.com exclusive property of rheavendors group

rear cabinet (Plumbed version)		
Pos.	**Code**	**Description**
1	Z0010028249NA-05	CABINET (BLACK)
2	ELE0060520	GROUND PIN
3	ELE0062020	BOARD SUPPORT
4	SCH0008964-01	CPU/POWER BOARD
5	Z0130013061-03	ELECTRIC COMPONENT SUPP.
6	ELE0003508CL	FUSE HOLDER+FUSE 12A
7	GUA0011010	PLUG
8	ELE0002014CL3	BIPOLAR SWITCH 15A 250V
9	ELE0002315	MAINS SOCKET 115/250V 10A
10	VIT0002010	SCREW ST HEAD CAP M3.5X9.5
11	ELE0000462	FAN 24V DC-LOW SPEED
12	Z0010027064	FAN SUPPORT
13	ELE0000461	FAN 24V DC-HIGH SPEED
14	Z0010027065	FAN CONNECTOR
15	VIT0002401	SCREW ST HEAD CAP M3.5X9.5
16	TEOL000001CL1	EXTRACTOR TUBE D.20 170MM
17	Z0010028248-09	HYDRAULIC HOLDER
18	Z0600016455	H2O OUTLET PLUG
19	Z0110007003	VOLUMETRIC COUNTER
20	GUA0010551	ELECTRICAL GROMMET
21	Z0110001058	WATER INLET VALVE 24V DC
22	VIT0002009	SCREW ST HEAD CAP M3.5X6.5
23		See table water inlet panel

www.rheavendors.com tel: 0039 02 966 551 fax: 0039 02 96 55 086 email: rheavendors@rheavendors.com exclusive property of rheavendors group

DOOR

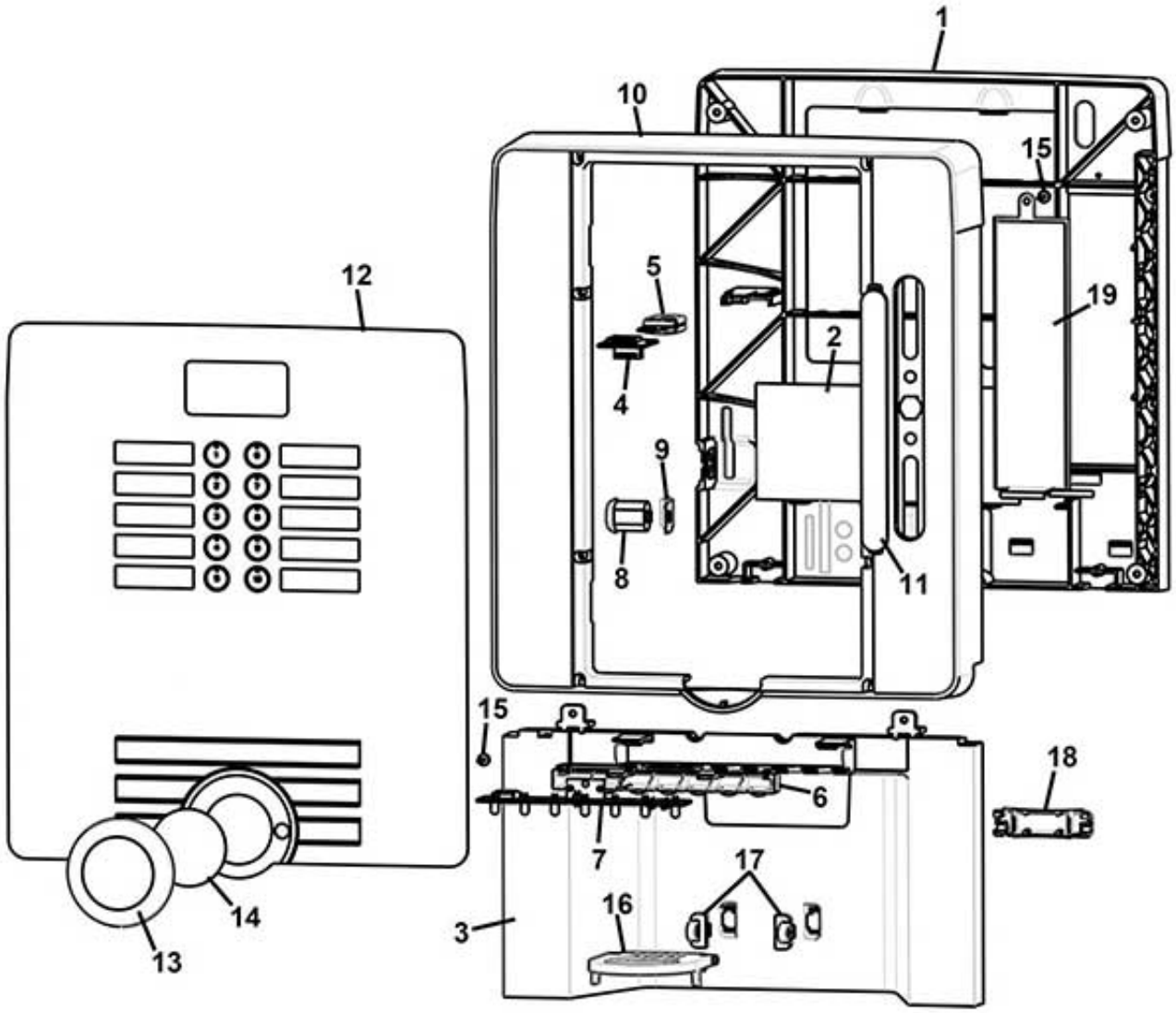

www.rheavendors.com tel: 0039 02 966 551 fax: 0039 02 96 55 086 email: rheavendors@rheavendors.com exclusive property of rheavendors group

DOOR		
Pos.	**Code**	**Description**
1	Z0020037657NA	DOOR
2	Z0020037659	LED REFLECTING ADHESIVE LABEL
3	Z0020037652CM	CUPS STATION FRAME RAL9006
4	SCH0005860	FLASH BOARD
5	Z0020040310CL/3	RHEA FLASH MEMORY(BLUE)
6	Z0020039078TR	CUP STAT.ENLIGHTENMENT SUPPORT
7	SCH0008144	LIGHTING CUP STATION BOARD
8	SER0000028/1	LOCK INOX RVI MM20 C.3480
9	Z0010028157	LOCK PLATE
10	Z0020037653CM	DOOR FRAME RAL9006
11	Z0020039416	COIN ENTRY BLANK PLATE
12/a	1030000194	FRONTAL ADHESIVE PANEL
12/b	1030000195	FRONTAL ADHESIVE PANEL
13	Z0020039084CL	§ DOOR LOGO FRAME CROMO
14	1030000188	ADHESIVE LOGO
15	VIT0002469	SCREW HEAD TAP M3.5X10
16/a	Z0020039072TR-02	CUP SUPPORT (TRANSPARENT)
16/b	Z0020039072NA-02	CUP SUPPORT BLACK
17/a	Z0020039073CM	CUP SUPPORT PIN RAL9006
17/b	Z0020039073NA	CUP SUPPORT PIN BLACK
18	Z0020039087-03IC	CUP HOLDER BRACKET
19	Z0020037661NA	PAY SYSTEM PLUG

www.rheavendors.com tel: 0039 02 966 551 fax: 0039 02 96 55 086 email: rheavendors@rheavendors.com exclusive property of rheavendors group

COIN BOX MECHANISM DOOR

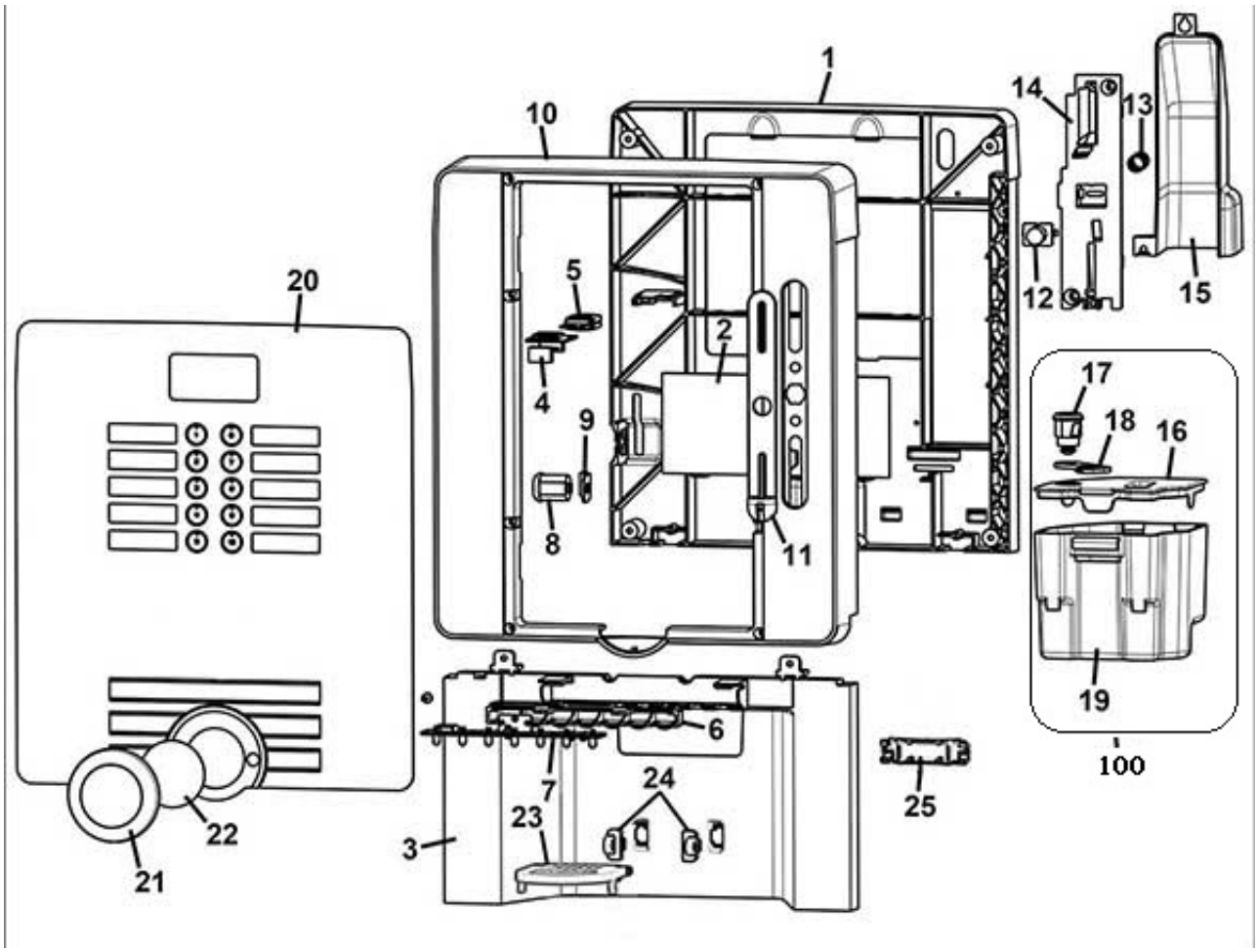

www.rheavendors.com tel: 0039 02 966 551 fax: 0039 02 96 55 086 email: rheavendors@rheavendors.com exclusive property of rheavendors group

COIN BOX MECHANISM DOOR		
Pos.	**Code**	**Description**
1	Z0020037657NA	DOOR
2	Z0020037659	LED REFLECTING ADHESIVE LABEL
3	Z0020037652CM	CUPS STATION FRAME RAL9006
4	SCH0005860	FLASH BOARD
5	Z0020040310CL/3	RHEA FLASH MEMORY(BLUE)
6	Z0020039078TR	CUP STAT.ENLIGHTENMENT SUPPORT
7	SCH0008144	LIGHTING CUP STATION BOARD
8	SER0000028/1	LOCK INOX RVI MM20 C.3480
9	Z0010028157	LOCK PLATE
10	Z0020037653CM	DOOR FRAME RAL9006
11/a	Z0020035031CM	COIN ENTRY PLATE RAL9006
11/b	Z0020035031NA	COIN ENTRY PLATE BLACK
12/a	Z0020035033CM	COIN RETURN BUTTON RAL9006
12/b	Z0020035033NA	COIN RETURN BUTTON BLACK
13	Z0020035034	COIN RETURN BUTTON SPRING
14	Z0020035032NA	PAYM SYSTEM SUPPORT
15	Z0020037656NA	PAY. SYSTEM COVER
16	Z0030010212NA	COINS BOX COVER
17	SER0000015	LOCK MM20 C.3430
18	Z0020037128	COIN BOX HOOK
19	Z0030010211NA	COINS BOX
20/a	1030000196	FRONTAL ADHESIVE PANEL
20/b	1030000197	FRONTAL ADHESIVE PANEL
21	Z0020039084CL	§ DOOR LOGO FRAME CROMO
22	1030000188	ADHESIVE LOGO
23/a	Z0020039072TR-02	CUP SUPPORT (TRANSPARENT)
23/b	Z0020039072NA-02	CUP SUPPORT BLACK
24/a	Z0020039073CM	CUP SUPPORT PIN RAL9006
24/b	Z0020039073NA	CUP SUPPORT PIN BLACK
25	Z0020039087-03IC	CUP HOLDER BRACKET
100	Z0030010210R	§ COIN BOX (from pos. 16 to pos. 19)
200	D1019600A1000	KIT W/FIT W/O MECH RAL9005 From pos. 11 to pos. 19 (excluded pos. 11/a and 12/a)
201	D1019600A0000	KIT W/FIT W/O MECH RAL9006 From pos. 11 to pos. 19 (excluded pos. 11/b and 12/b)

www.rheavendors.com tel: 0039 02 966 551 fax: 0039 02 96 55 086 email: rheavendors@rheavendors.com exclusive property of rheavendors group

LIGHTING GLASS

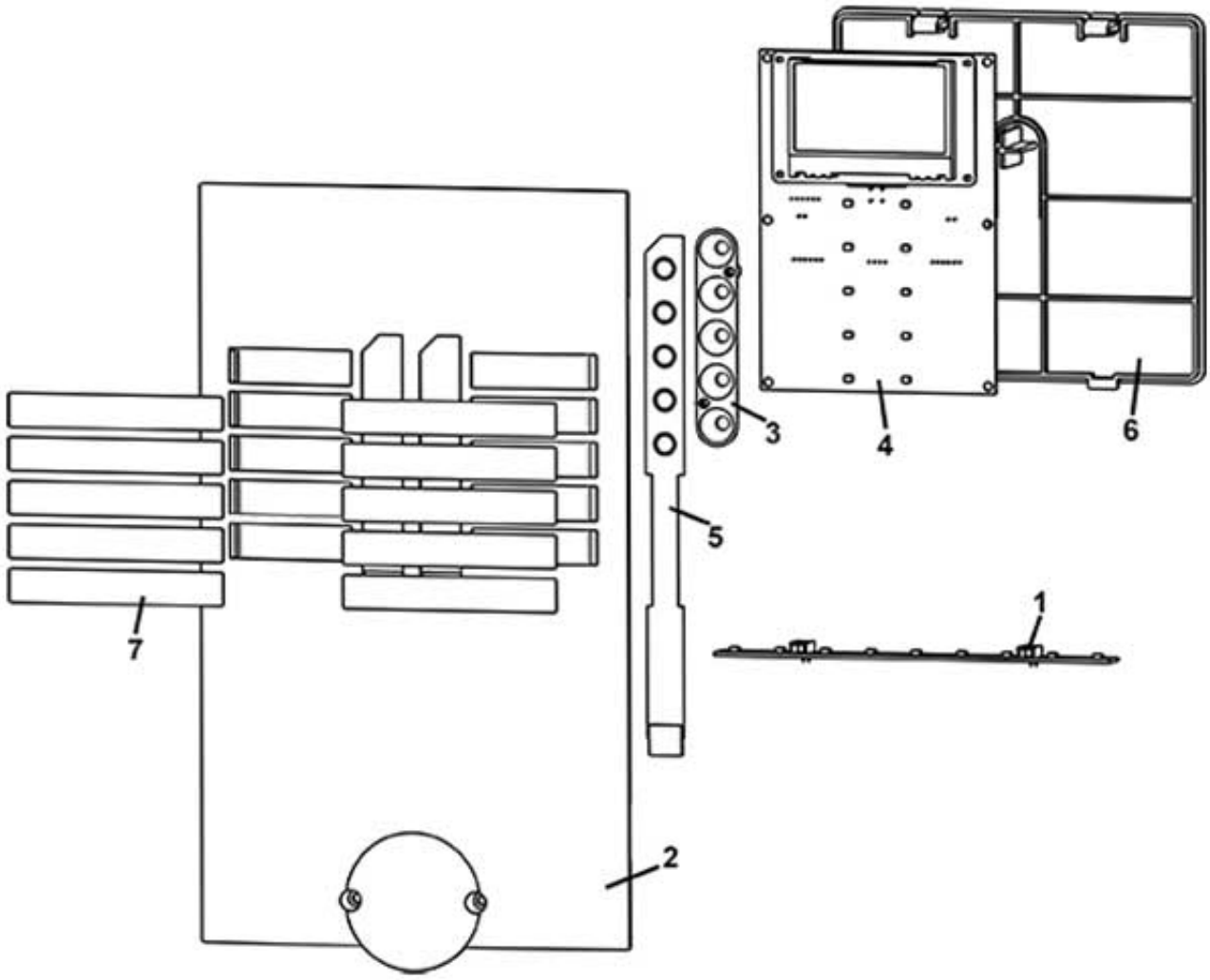

www.rheavendors.com tel: 0039 02 966 551 fax: 0039 02 96 55 086 email: rheavendors@rheavendors.com exclusive property of rheavendors group

LIGHTING GLASS		
Pos.	**Code**	**Description**
1	SCH0008160	LIGHTING BOARD
2	Z0020037654TR	PLEXIGLASS GRAPHIC PANEL
3	Z0020039079NA	GUIDE
4	SCH0008980CL	§ DISPLAY BOARD 128X64
5	ELE0000470	KEYPAD 5 BUTTONS-RIGHT
6	Z0020037655-01IC	DOOR COVER RAL2011
7		Communicate the serial number of the machine during the order

www.rheavendors.com tel: 0039 02 966 551 fax: 0039 02 96 55 086 email: rheavendors@rheavendors.com exclusive property of rheavendors group

mixer plan (espresso version)

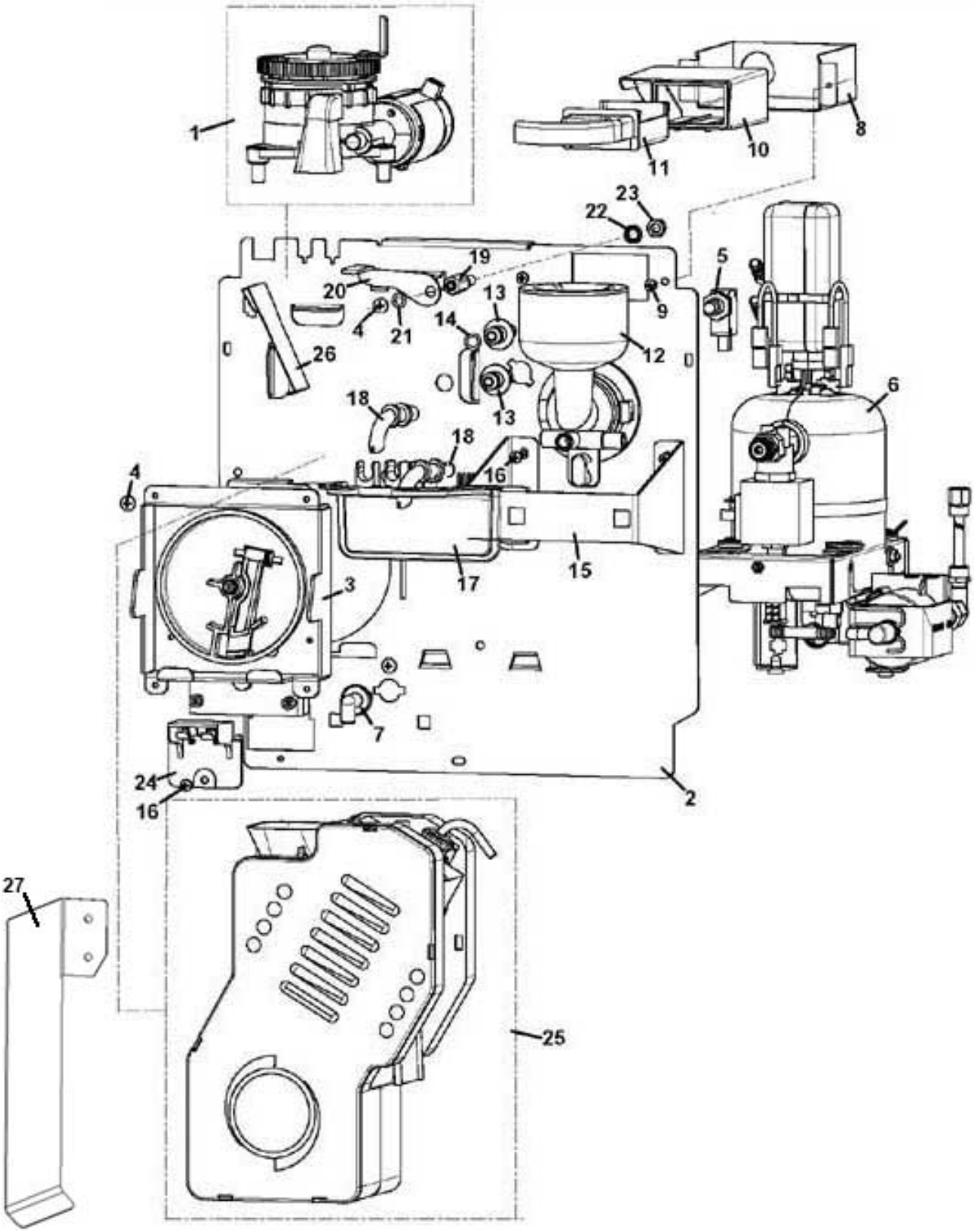

www.rheavendors.com tel: 0039 02 966 551 fax: 0039 02 96 55 086 email: rheavendors@rheavendors.com exclusive property of rheavendors group

mixer plan (espresso version)		
Pos.	**Code**	**Description**
1		See table GRINDER
2	Z0260012311NA	BREWER MOUNTING PLATE BLACK
3		See table micro coffee group motor support
4	VIT0000030	SCREW HEAD TAP CAP M4X7
5	ELE0001506	MICROSWITCH
6		See table ESPRESSO boiler support
7	Z0080100084	90° CONNECTOR
8	Z0070030422	SUCTION SUPPORT
9	VIT0002002	SCREW ST HEAD CAP M3.5X6.5
10	Z0010027214	TRAP DRAWER
11	Z0010027022	TRAP DRAWER REMOVABLE
12		See table mixer
13	Z0080100013	MIXER CONNECTOR
14	GUA0000085	OR 106 RED SILICONE A70
15	Z0380020003NA-02	NOZZLES HOLDER
16	VIT0002010	SCREW ST HEAD CAP M3.5X9.5
17	Z0380020001CM	NOZZLES HOLDER
18	Z0010020052	PRODUCT NOZZLE
19	Z0010020196	BREWER FIX LEVER
20	Z0010020132	FIXING PLATE
21	GUA0000004	OR 104 NBR AL 75 BLACK
22	VIT0003105	SPRING WASHER 6,4
23	VIT0004505	NUT M6
24	Z0010020836CL	§DRIP TRAY SENSOR
25		See table micro coffee group
26	Z0250008038	COFFEE POWDER CHUTE
27	Z0010028223NA	ESPRESSO BREW PROTECTION BLACK

www.rheavendors.com tel: 0039 02 966 551 fax: 0039 02 96 55 086 email: rheavendors@rheavendors.com exclusive property of rheavendors group

micro coffee group motor support

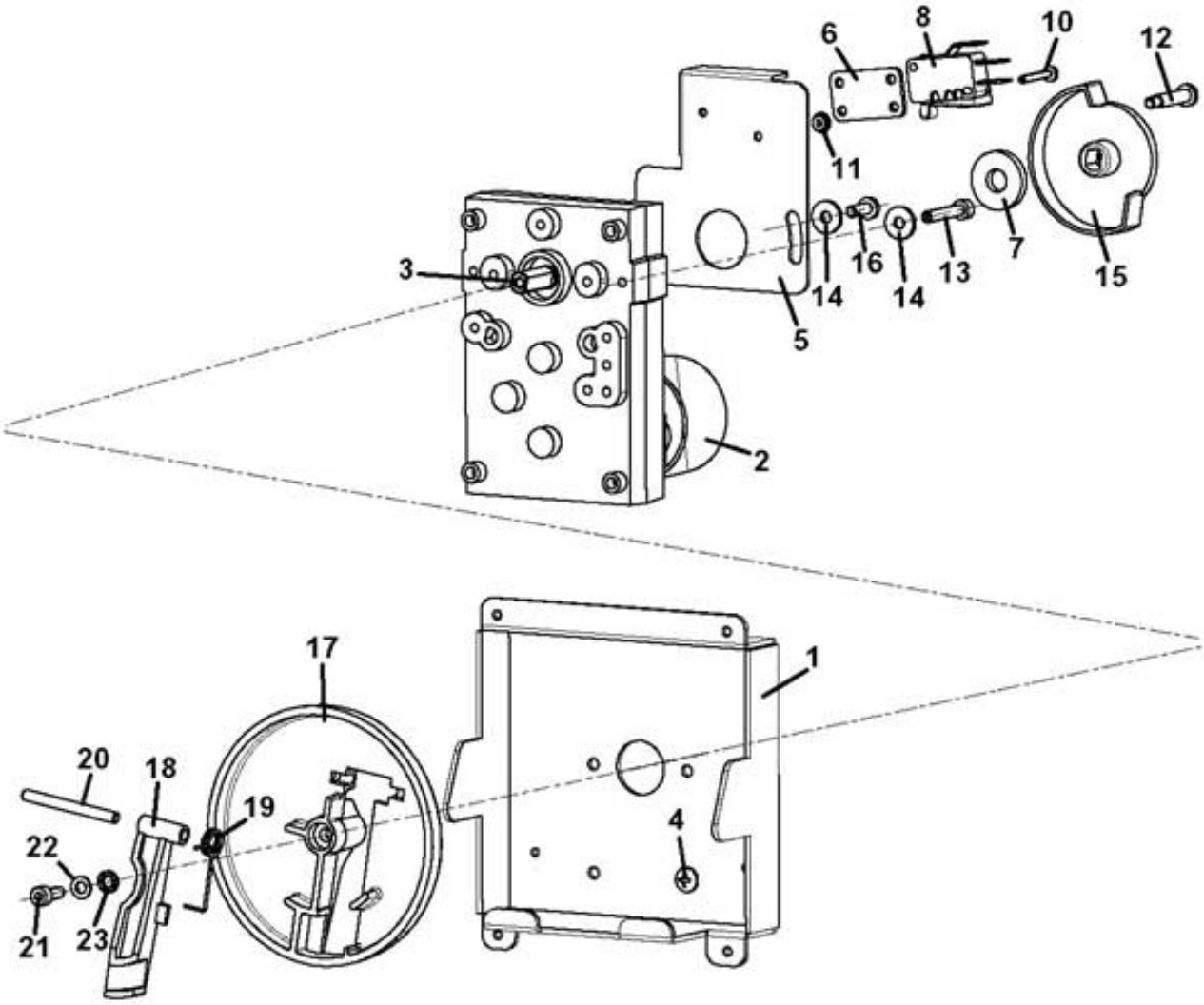

www.rheavendors.com tel: 0039 02 966 551 fax: 0039 02 96 55 086 email: rheavendors@rheavendors.com exclusive property of rheavendors group

micro coffee group motor support		
Pos.	**Code**	**Description**
1	Z0260010128KE	MICRO BREWER MOTOR RED SUPPORT
2	Z0090002191R	§ GEARBOX MOTOR 11RPM 24V DC Pos. 2+3
3	Z0090002191R	§ GEARBOX MOTOR 11RPM 24V DC Pos. 2+3
4	VIT0000030	SCREW HEAD TAP CAP M4X7
5	Z0250008093	MICRO PLATE
6	4600010014	SPACER
7	Z0250008091	SPACER
8	ELE0001529	MICROSWITCH WITH LEVER
10	VIT0000007	SCREW HEAD TAP CAP M3X20
11	VIT0004701	NUT M3
12	Z0250008126	PIN M4
13	VIT0005521	SCREW HEX HEAD REC TAP M4X25
14	VIT0003301	WASHER 4,3X12X1,5
15	Z0250008043	MICRO GROUP READER DISK
16	VIT0000012	SCREW HEAD TAP CAP M4X10
17	Z0250008012	MOTOR CRANK
18	Z0250008034	HOOKING LEVER
19	Z0250008059	SPRING
20	VIT0005205	DOWEL PIN 4X40
21	VIT0005508	SCREW HEX HEAD REC TAP M4X12
22	VIT0003003	WASHER 4,3X8X0,8
23	VIT0003103	SPRING WASHER 4,3

www.rheavendors.com tel: 0039 02 966 551 fax: 0039 02 96 55 086 email: rheavendors@rheavendors.com exclusive property of rheavendors group

ESPRESSO boiler support

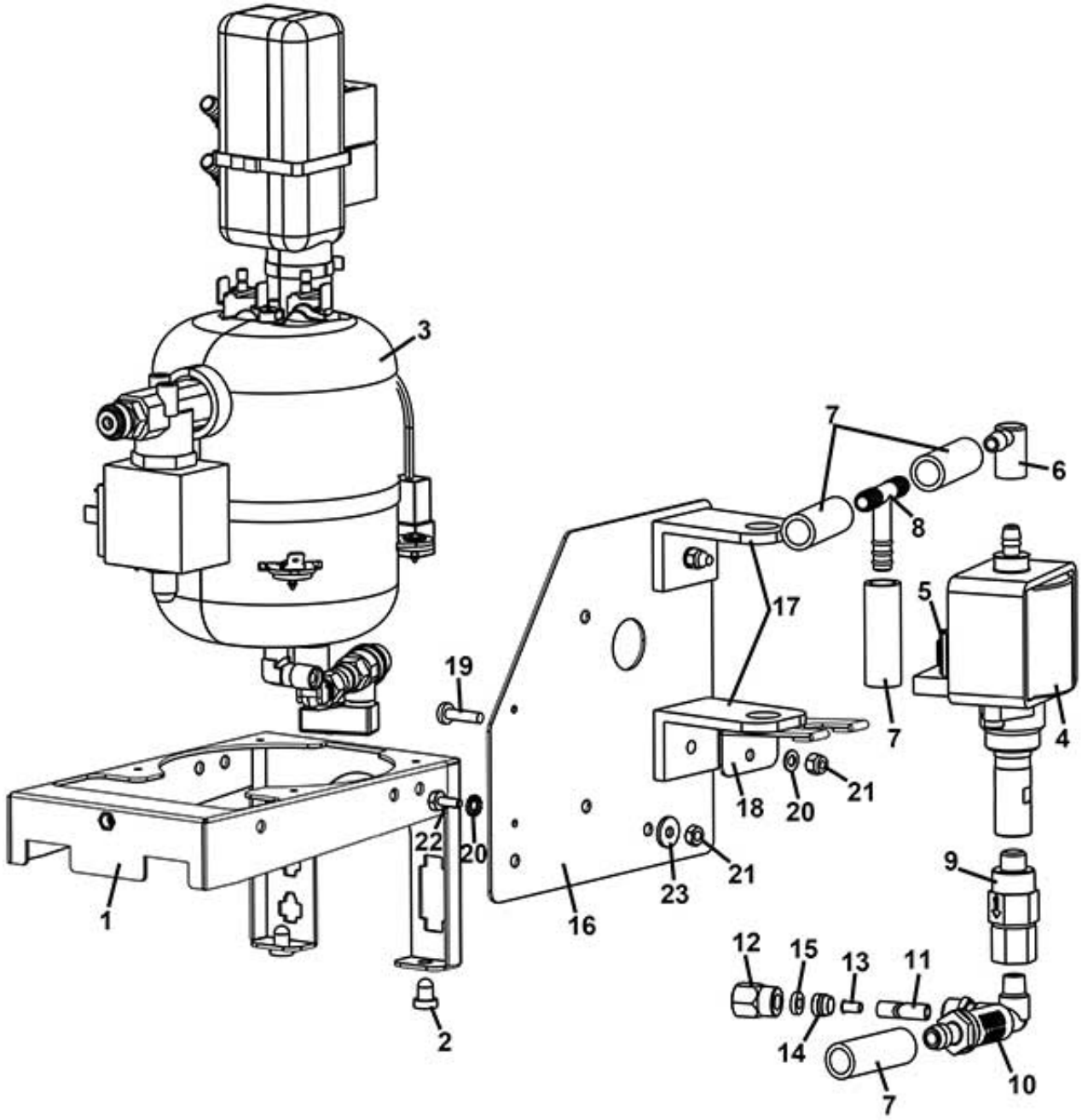

www.rheavendors.com tel: 0039 02 966 551 fax: 0039 02 96 55 086 email: rheavendors@rheavendors.com exclusive property of rheavendors group

ESPRESSO boiler support		
Pos.	**Code**	**Description**
1	Z0600019720NA	INOX BOILER SUPPORT
2	Z0020018061	SELECTION BUTTON PLUG
3		See table micro group boiler
4/a	Z0110004041	PUMP EX5 230V-50HZ
4/b	Z0110004042	PUMP EX5 220V 50-60HZ For version 220V
5	ELE0000915	PUMP THERMOPROTECTOR
6	Z0110004023	CONNECTOR
7/a	TSIL05/08T-10	SILICON HOSE 5X8 MT.10
7/b	TSIL05/08T-50	SILICON HOSE 5X8 MT.50
8	Z0100003022	T CONNECTOR 461 TS UL
9	Z0110002012R	§ SAFETY VALVE E:1/8M O:1/8F
10/a	Z0110004070	BY PASS VALVE 11 BAR
10/b	Z0110004060	BY PASS VALVE 8 BAR
11	TTEF04/06T	PTFE PIPE 4X6
12	Z0100001002	CONNECTOR NUT
13	Z0100002005	NUT D.4
14	Z0100002002	LOCKING RING SO1-6
15	Z0100003002	COPPER GASKET SO5-5-1/8
16	Z0010028234-03	SUPPORT PUMP
17	Z0110004022	SUPPORT
18	Z0010027223	PUMP SUPPORT BRACKET
19	VIT0000014	SCREW HEAD TAP CAP M4X16
20	VIT0003103	SPRING WASHER 4,3
21	VIT0004503	NUT M4
22	VIT0000205	SCREW HEX HEAD M4X10
23	VIT0003301	WASHER 4,3X12X1,5

www.rheavendors.com tel: 0039 02 966 551 fax: 0039 02 96 55 086 email: rheavendors@rheavendors.com exclusive property of rheavendors group

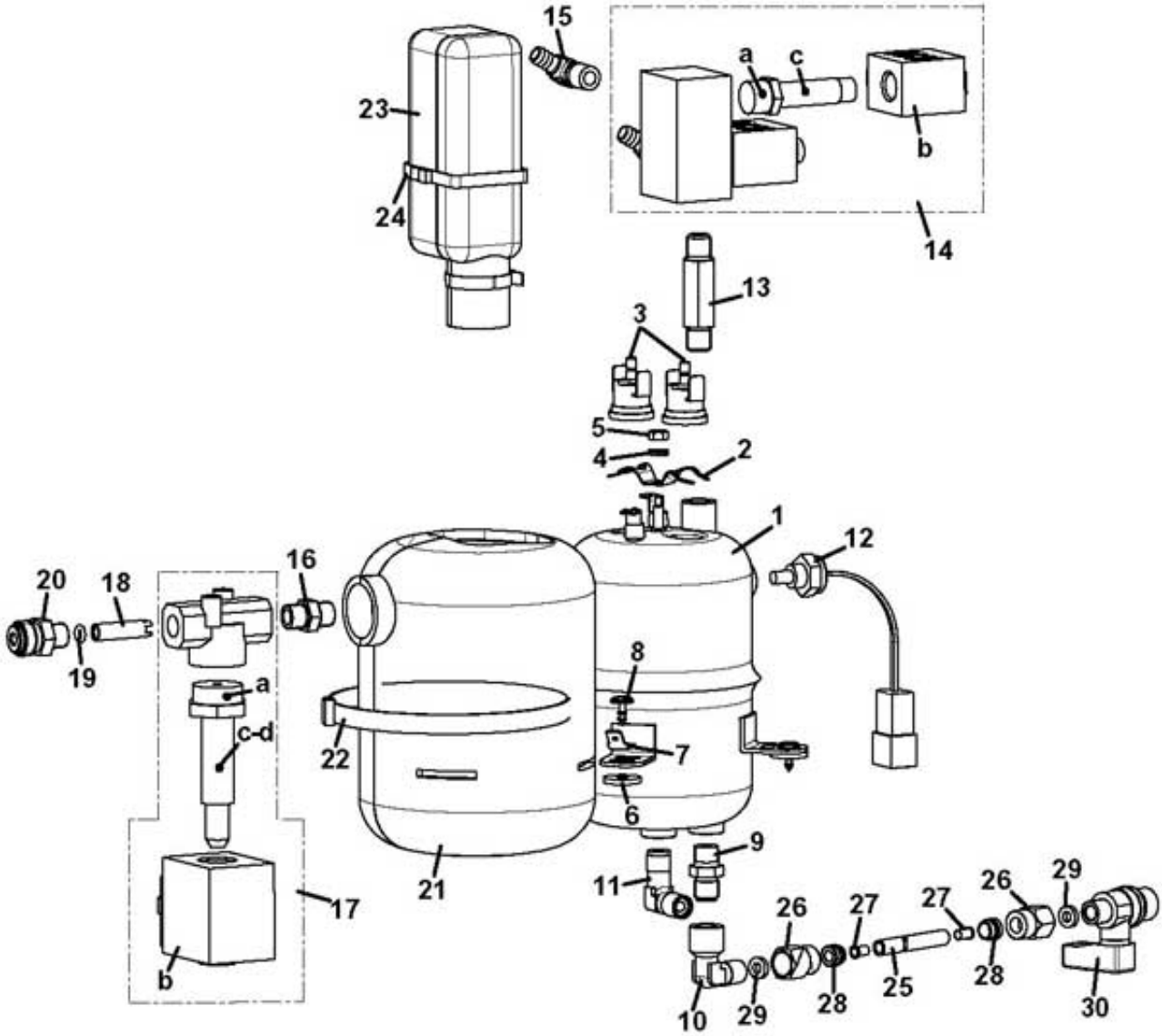

www.rheavendors.com tel: 0039 02 966 551 fax: 0039 02 96 55 086 email: rheavendors@rheavendors.com exclusive property of rheavendors group

micro group boiler		
Pos.	**Code**	**Description**
1	Z0600019701CL	§ BOILER 1500 W 230V 400 CC
2	Z0600019188	THERMOSTAT CLIP
3	ELE0000982	CLIXSON 127°
4	VIT0003109	SPRING WASHER 4,3
5	VIT0004816	NUT M4
6	1600001098	RUBBER SPACER D. 4,5
7	Z0600019012	GROUND WIRING
8	VIT0002401	SCREW ST HEAD CAP M3.5X9.5
9	Z0100001017	STRAIGHT CONNECT SO1100-6-1/8
10	Z0100001085	ELBOW CONNECTOR
11	Z0100001019	ELBOW CONNECTOR SO2400-6-1/8
12	ELE0000975	PROBE
13	Z0110001220	STRAIGHT CONNECTOR MM 1/8 GC
14	Z0110001111	VALVE BLOCK.2 2W 24V DC 7W before order pls check ORING color of the sleeve
14/a	Z0110010138	SLEEVE D.13,9+WHITE OR
14/a	Z0110010148	SLEEVE D.14,9+GREEN OR
14/b	Z0110010135	COIL 7W 24V DC
14/c	Z0110010136	CORE+SPRING
15	Z0100001102	CONNECTOR 1/8"-Ø7,2 90°
16	Z0100001084	NIPPLE 1/8
17_1	Z0110001112	VALVE 3W 1/8 24V DC
17_1/a	Z0110010142	SLEEVE
17_1/b	Z0110010141	COIL 24V DC
17_1/c	Z0110010144	CORE+SPRING
17_1/d	Z0110010146	SPRING
17_2	Z0110001072	VALVE 3W 1/8 24DC O
17_2/a		COMPONENT NO LONGER AVAILABLE FOR SALE
17_2/b	Z0110010065	COIL 8 W 24 DC
17_2/c		COMPONENT NO MORE SELLING
18	Z0110003122	SPACER OR
19	GUA0000069	OR 2015 VITON 80 BLACK
20	Z0110003121	STRAIGHT CONNECTOR
21	Z0600019195	INSULATION SHELL
22	FASC000214	PLASTIC CLIP BLACK 7,8X365
23	Z0600019197	EV HOUSING INSULATION
24	FASC000215	PLASTIC CLIP BLACK 2,6X200
25	TTEF04/06T	PTFE PIPE 4X6
26	Z0100001002	CONNECTOR NUT
27	Z0100002005	NUT D.4
28	Z0100002002	LOCKING RING SO1-6
29	Z0100003002	COPPER GASKET SO5-5-1/8
30	Z0600019017	TAP M/F 1/8

www.rheavendors.com tel: 0039 02 966 551 fax: 0039 02 96 55 086 email: rheavendors@rheavendors.com exclusive property of rheavendors group

mixer

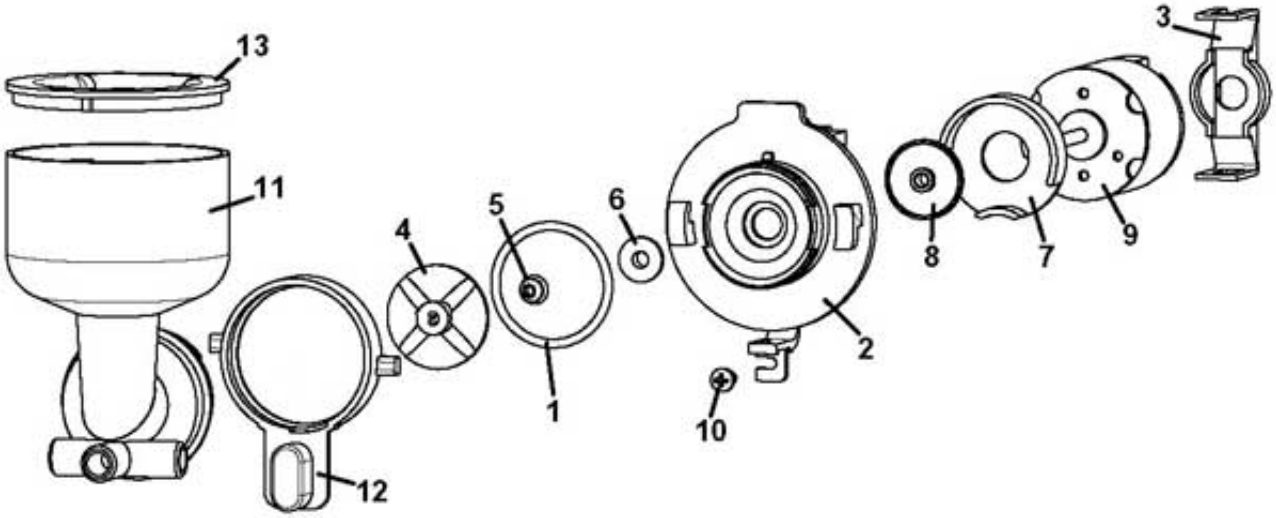

www.rheavendors.com tel: 0039 02 966 551 fax: 0039 02 96 55 086 email: rheavendors@rheavendors.com exclusive property of rheavendors group

mixer		
Pos.	**Code**	**Description**
1	GUA0000084	OR 3131 RED SILICONE A60
2	Z0080100005	MOTOR MIXER BASE
3	Z0080100009IC	MIXER MOTOR SUPPORT RAL2011
4	Z0080100011	MIXER FAN
5	Z0080100102	MIXER SHAFT GASKET
6	Z0080100015	MIXER BUSH
7	Z0080100023IC	MIXER COVER RAL2011
8	Z0080100024	MIXER FAN
9	Z0090003023	MIXER MOTOR 24V DC SHAFT D.4
10	VIT0002401	SCREW ST HEAD CAP M3.5X9.5
11/a	Z0080200101L	MIXING BOWL L.W/H20 BREAKER
11/b	Z0080200102R	MIXING BOWL R.W/H20 BREAKER
11/c	Z0080200103C	MIXING BOWL F.W/H20 BREAKER
12	Z0080100006IC	LOCK RING RAL2011
13	Z0080100008	UPPER RING
100	Z0080100001R	§ MIXER BOWL BASE+MOTOR

www.rheavendors.com tel: 0039 02 966 551 fax: 0039 02 96 55 086 email: rheavendors@rheavendors.com exclusive property of rheavendors group

GRINDER

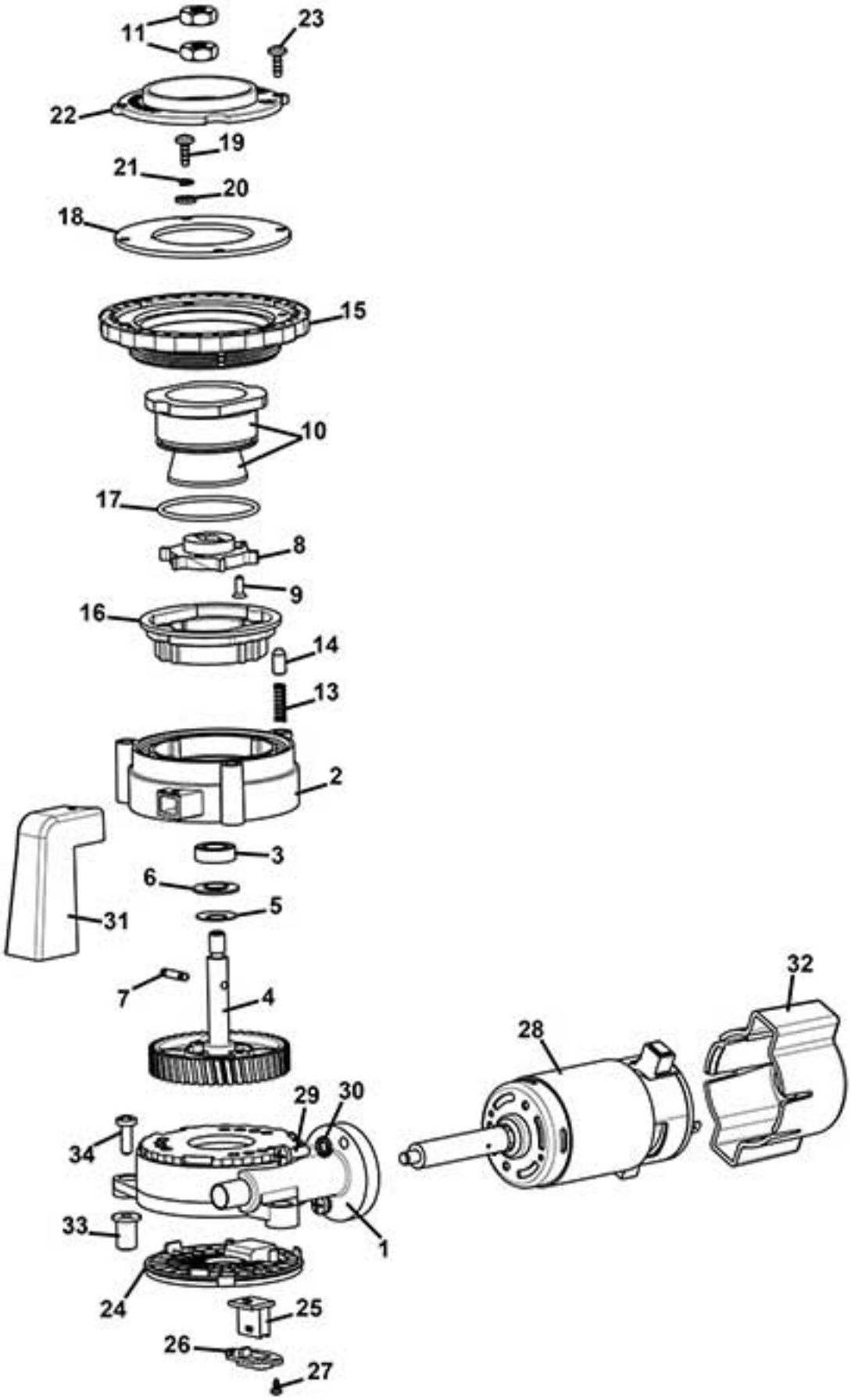

www.rheavendors.com tel: 0039 02 966 551 fax: 0039 02 96 55 086 email: rheavendors@rheavendors.com exclusive property of rheavendors group

GRINDER		
Pos.	**Code**	**Description**
1/a	Z0320001603NAR	§ MOTOR SUPPORT BLACK+PLUG Not more sold. Substituted from pos. 1/b
1/b	Z0320001701R	§ MOTOR SUPPORT ALUMINIUM+PLUG
2	Z0320001602NAR	GRINDER BLADES SUPPORT
3	VIT0009325	BEARING
4	Z0320001608R	TRANSMISSION WHEEL
5	Z0320001629	CUP SPRING 16x8,2 SP. 0,4
6	Z0320001625	BUSH
7	Z0320001704	GRINDER ROTATION PIN REINFORCE
8	Z0320001636	EJECTOR
9	VIT0000121	SCREW COUNT FLAT HEAD M3X8
10/a		Not more sold. Substituted from pos. 10/b
10	Z0320001680	CONIC BLADES PLUS
11	Z0320001642	LOWER GRINDER FIXING NUT
13	Z0320001643	SPRING D.4X15X0,6
14	Z0320001624	REGULATION PIN
15	Z0320001605NAR	§ REGULATION RING NUT BLACK
16	Z0320001635-03NA	GRINDER SUPPORT BLACK
17	GUA0000124	SILICONE OR 2137
18	Z0320001622	UPPER GRINDER FIXING
19	VIT0002469	SCREW HEAD TAP M3.5X10
20	Z0320001666	SPACER D.4x7x2
21	VIT0003103	SPRING WASHER 4,3
22	Z0320001607NA	DUCT BLACK
23	VIT0002469	SCREW HEAD TAP M3.5X10
24	Z0320001604NA	PLUG BLACK
25	SCH0009360	ENCODER BOARD
26	Z0320001616NA	SENSOR SUPPORT (BLACK)
27	VIT0002032	SCREW TCB 2,2X4,5
28	Z0090003047	GRINDER MOTOR 230V DC
29	VIT0000013	SCREW HEAD TAP CAP M4X12
30	VIT0003103	SPRING WASHER 4,3
31	Z0010028262NA	GRINDER CHUTE
32	Z0320001615NA	GRINDER SENSOR COVER BLACK
33	Z0320001628	NO-VIBRATION BUSH
34	VIT0000012	SCREW HEAD TAP CAP M4X10
100	Z0320001601CL2AL	§ GRINDER-MICRO BREWER PLUS

www.rheavendors.com tel: 0039 02 966 551 fax: 0039 02 96 55 086 email: rheavendors@rheavendors.com exclusive property of rheavendors group

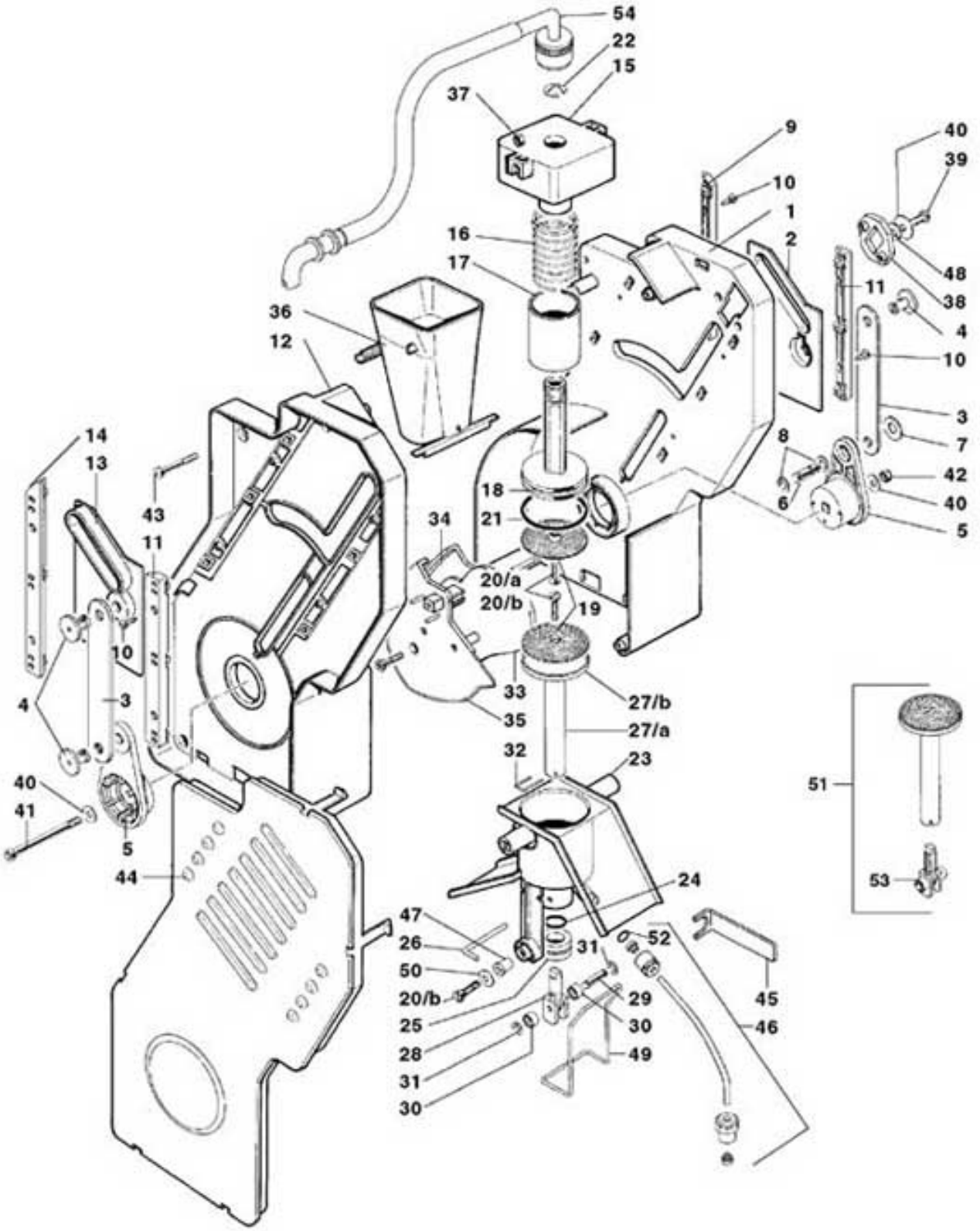

www.rheavendors.com tel: 0039 02 966 551 fax: 0039 02 96 55 086 email: rheavendors@rheavendors.com exclusive property of rheavendors group

micro coffee group		
Pos.	**Code**	**Description**
1	Z0250008005R	§ MICRO BREWER COVERS-L.H+R.H
2	Z0250008084	INFUSION CHAMBER CAM-RIGHT
3	Z0250008009	CONNECTING ROD
4	Z0250008028	CONNECTING ROD PIN
5	Z0250008011	RIGHT CRANK
6	Z0250008014	PIN
7	Z0250008042	ANTIVIBRATION WASHER
8	VIT0006515	RING 5
9	Z0250008031	REAR RIGHT GUIDE
10	VIT0002026	SCREW ST HEAD CAP M3.5X6.5
11	Z0250008033	FRONTAL GUIDE
12	Z0250008005R	§ MICRO BREWER COVERS-L.H+R.H
13	Z0250008085	INFUSION CHAMBER CAM-LEFT
14	Z0250008032	REAR LEFT GUIDE
15	Z0250008086	UPPER FILTER SUPPORT
16	Z0250008024	UPPER FILTER SPRING
17	Z0250008087	SPRING COVER PIPE
18/a	Z0250008026R	§ UPPER COFFEE FILTER D 36 For Coffee beans group D. 36 (Pos.18/a+19/a+21/a+20)
18/b	Z0250008208R	§ UPPER COFFEE FILTER D.40 For Coffee beans group D. 40 --- (Pos. 18/b+19/b+21/b+20)
19/a	Z0250008099	COFFEE FILTER 33,4 For Coffee beans group D. 36
19/b	Z0250008211	COFFEE FILTER 37,3 For Coffee beans group D. 40
20	VIT0000121	SCREW COUNT FLAT HEAD M3X8
21/a	GUA0000080	OR 4112 RED SILICONE LSR70
21/b	GUA0000097	OR 4131 RED SILICONE LSR70
22	VIT0006513	RING 8
23/a	Z0250008046R	§ BREWER INFUSION CHAMBER
23/b	Z0250008206R	§ LOWER COFFEE FILTER D.40
24	GUA0000065	OR 112 SILICON
25	Z0250008053	LOWER INLET CUP BUSH
26	Z0250008029	FUNNEL PIN
27/a	Z0250008108	LOWER FILTER SHAFT
27/b	Z0250008122	COFFEE FILTER LOW 36
27/c	Z0250008209IC	LOWER COFFEE FILTER D.40
28	Z0250008106	BEARING SUPPORT
29	Z0250008021	BEARING SHAFT
30	Z0250008022	BEARING
31	VIT0006517	RING 3.2
33	Z0250008083	CAM
34	Z0250008016	CAM RIGHT
35	Z0250008017	CAM LEFT
36	Z0250008036	COFFEE FUNNEL
37	VIT0004803	NUT M4
38	Z0250008035	SETTING PLATE
39	VIT0000032	SCREW HEAD TAP CAP M4X8
40	VIT0003309	WASHER4,3X16X1,5
41	VIT0005523	SCREW HEX HEAD REC TAP M4X60
42	VIT0004810	NUT M4

www.rheavendors.com tel: 0039 02 966 551 fax: 0039 02 96 55 086 email: rheavendors@rheavendors.com exclusive property of rheavendors group

micro coffee group		
43	VIT0002461	SCREW HEAD TAP M4.2X26
44/a	Z0250008039CM	MICRO BREWER COVER-L.H RAL9006 For Coffee beans group D. 36
44/b	Z0250008039IC	MICRO BREWER COVER-L.H RAL2011 For Coffee beans group D. 40
45	Z0250008048	KEY FOR NUT
46	Z0250008110CL	§ WATER INLET PIPE
47	VIT0009203	INSERT
48	VIT0003451	SPRING WASHER 4,2
50	Z0250008088	WASHER
51	Z0250008109R	§ LOW.COFFEE FILTER D.36+BEAR.
52	GUA0000061	OR 2010 VITON 80 BLACK
53	Z0250008107R	BEARING SUPPORT
54	Z0250008176R	§ COFFEE OUTLET PIPE
100	Z0250008001R	COFFEE BREWER MICRO D.36
101	Z0250008201R	COFFEE BREWER MICRO D.40
104	Z0250008108R	§ LOWER COFFEE FILTER D.36
105	Z0250008209R	§ LOWER COFFEE FILTER D.40
106	Z0250008210R	§ LOW.COFFEE FILTER D.40+BEAR.

www.rheavendors.com tel: 0039 02 966 551 fax: 0039 02 96 55 086 email: rheavendors@rheavendors.com exclusive property of rheavendors group

water inlet panel

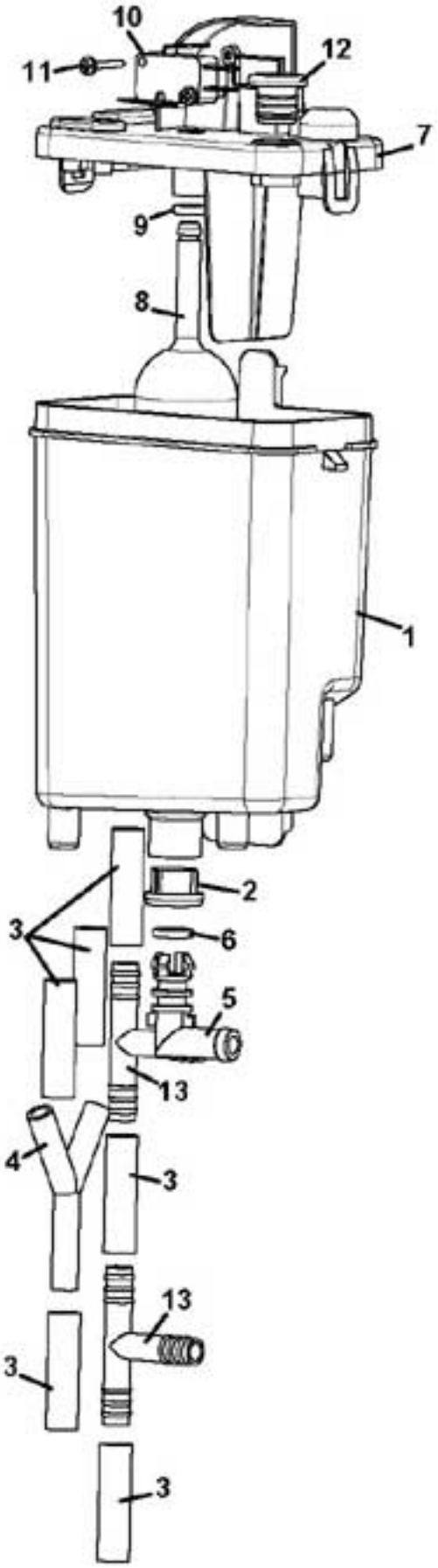

www.rheavendors.com tel: 0039 02 966 551 fax: 0039 02 96 55 086 email: rheavendors@rheavendors.com exclusive property of rheavendors group

water inlet panel		
Pos.	**Code**	**Description**
1	Z0800013041	AIR BREAK TANK
2	Z0110020007	PLASTIC FILTER DIAM. 20
3/a	TSIL07/11T-10	SILICON HOSE 7X11 MT.10
3/b	TSIL07/11T-50	SILICON HOSE 7X11 MT.50
4	Z0100001065	CONNECTOR "Y"
5	Z0800009211	ELBOW CONNECTOR
6	GUA0000043	OR 109 NBR AL 75 BLACK
7	Z0800013043	AIR BREAK COVER
8	Z0800013046	AIR BREAK WASTE FLOAT
9	GUA0000082	SILICON GASKET D.6
10	ELE0001514	MICROSWITCH 3A 125-250VA
11	VIT0002013	SCREW ST HEAD CAP M2.9X19
12	Z0800013051	VALVE GASKET
13	Z0100003023	T CONNECTOR 462 TS UL

www.rheavendors.com tel: 0039 02 966 551 fax: 0039 02 96 55 086 email: rheavendors@rheavendors.com exclusive property of rheavendors group

h2o tank

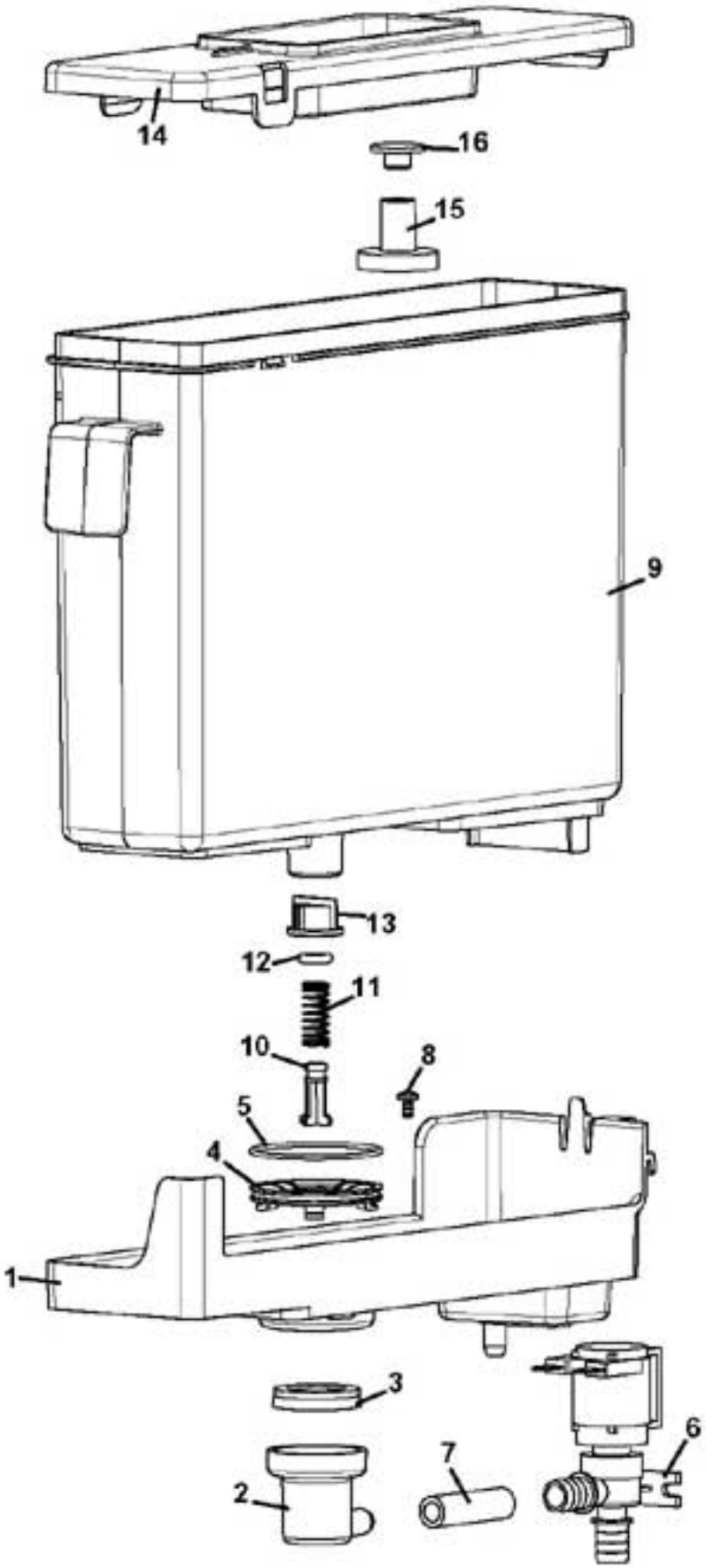

www.rheavendors.com tel: 0039 02 966 551 fax: 0039 02 96 55 086 email: rheavendors@rheavendors.com exclusive property of rheavendors group

h2o tank		
Pos.	**Code**	**Description**
1	Z0800012516	H2O TANK HOLDER
2	Z0800012512	WATER TANK ELBOW CONNECTOR
3	GUA0002100	SILICON GASKET
4	Z0800012515NA	RING GASKET BLACK
5	GUA0000046	OR 2137
6	Z0110001103	VALVE 2W 24V DC
7/a	TSIL07/11T-10	SILICON HOSE 7X11 MT.10
7/b	TSIL07/11T-50	SILICON HOSE 7X11 MT.50
8	VIT0002015	SCREW ST HEAD CAP M3.5X9.5
9	Z0800012506-03	H2O TANK
10	Z0800012009	WATER TANK CLOSING PIN
11	Z0800012012	PIN SPRING
12	GUA0000082	SILICON GASKET D.6
13	Z0110020011	FILTER
14	Z0800012507	H2O TANK LID
15	Z0020037046	WASTE FLOAT RAL 3020
16	Z0020037045	WASTE FLOAT RAL 9005
100	Z0800012500CL	§ WATER TANK From pos. 9 to pos. 16

www.rheavendors.com tel: 0039 02 966 551 fax: 0039 02 96 55 086 email: rheavendors@rheavendors.com exclusive property of rheavendors group

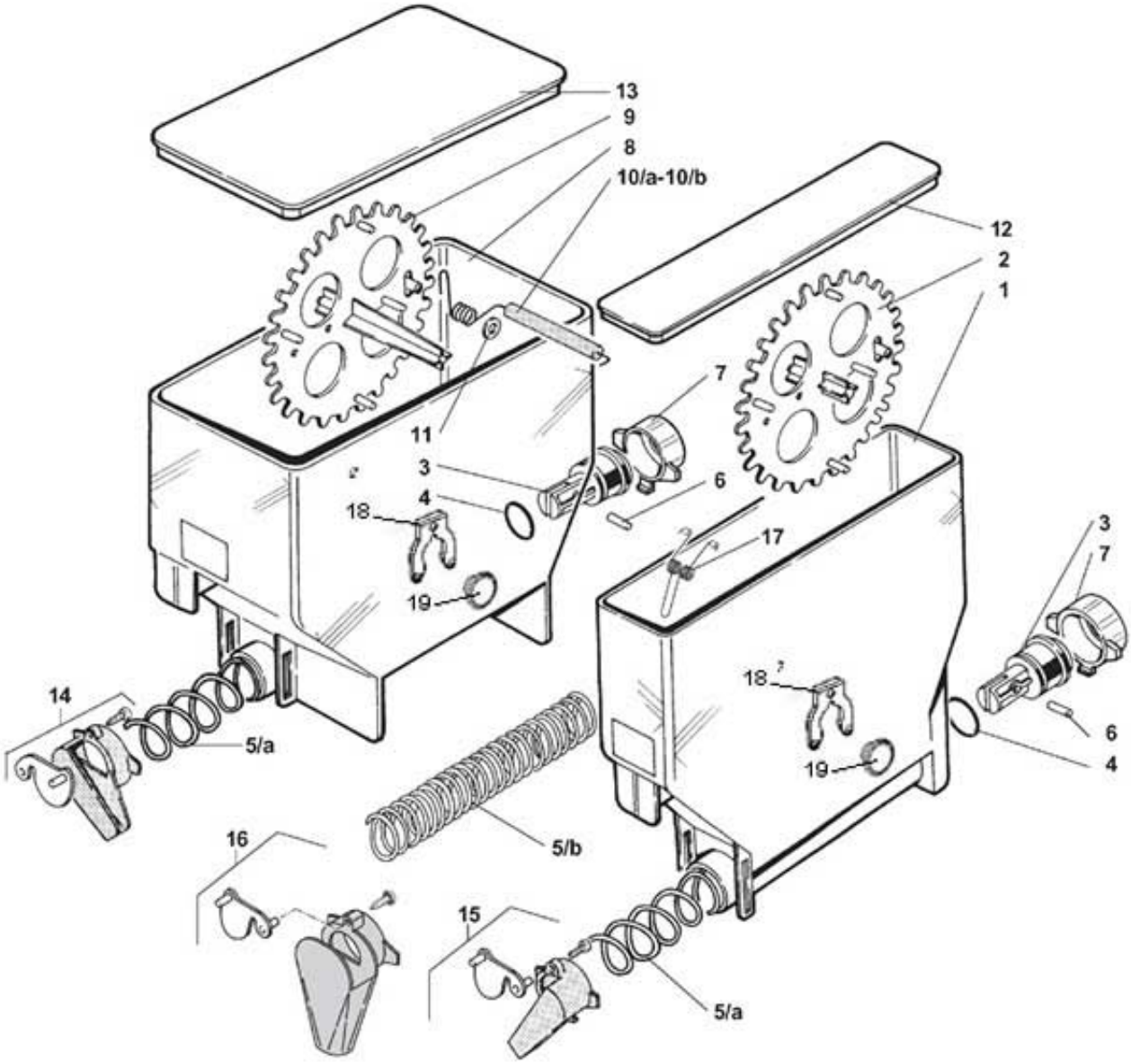

www.rheavendors.com tel: 0039 02 966 551 fax: 0039 02 96 55 086 email: rheavendors@rheavendors.com exclusive property of rheavendors group

product containers		
Pos.	**Code**	**Description**
1	Z0230030500	INGREDIENT CANISTER 54 190
2	Z0230030236AB	§ WHEEL MM54
3	Z0230030012	SPIRAL PIN
4	GUA0000083	OR 123 RED SILICONE A70
5/a	Z0230030014	SPIRAL 18
5/b	Z0230030013	SPIRAL 9
6	VIT0005106	PIN 2X14
7	Z0230030011	REAR BUSH
8	Z0230030520	INGREDIENT CANISTER 110-190
9	Z0230030237AB	§ WHEEL MM110
10/a	Z0230030064	AGITATOR 112 - RIGHT OUTLET
10/b	Z0230030062	AGITATOR 112 - LEFT OUTLET
11	VIT0003210	WASHER 8,4X16X1,6
12	Z0230030156	CANISTER 54 LID
13	Z0230030158	CANISTER 110 LID
14/a	Z0230030058R	§ INGRED. CHUTE-RIGHT ORANGE
14/b	Z0230030044R	§ INGREDIENT CHUTE-RIGHT RED
15/a	Z0230030057R	§ INGREDIENT CHUTE-LEFT ORANGE
15/b	Z0230030043R	§ INGREDIENT CHUTE-LEFT RED
16	Z0230030059R	§ INGRED. CHUTE-FRONTALORANGE
17	Z0230030060-05	PRODUCT AGITATOR
18	Z0230030239	WHEEL PIN FORK
19	Z0230030238-02	WHEEL PIN
100	Z0230030522R	§ CAN. 110-190 AGIT.18 W/LID-R
101	Z0230030525R	§ CAN. 110-190 AGIT.18 W/LID-L
102	Z0230030506R	§ CANIS. 54-190 WHEEL18 W/LID
103	Z0230030502R	§ CANIS. 54-190 WHEEL9 W/LID

www.rheavendors.com tel: 0039 02 966 551 fax: 0039 02 96 55 086 email: rheavendors@rheavendors.com exclusive property of rheavendors group

coffee beans container

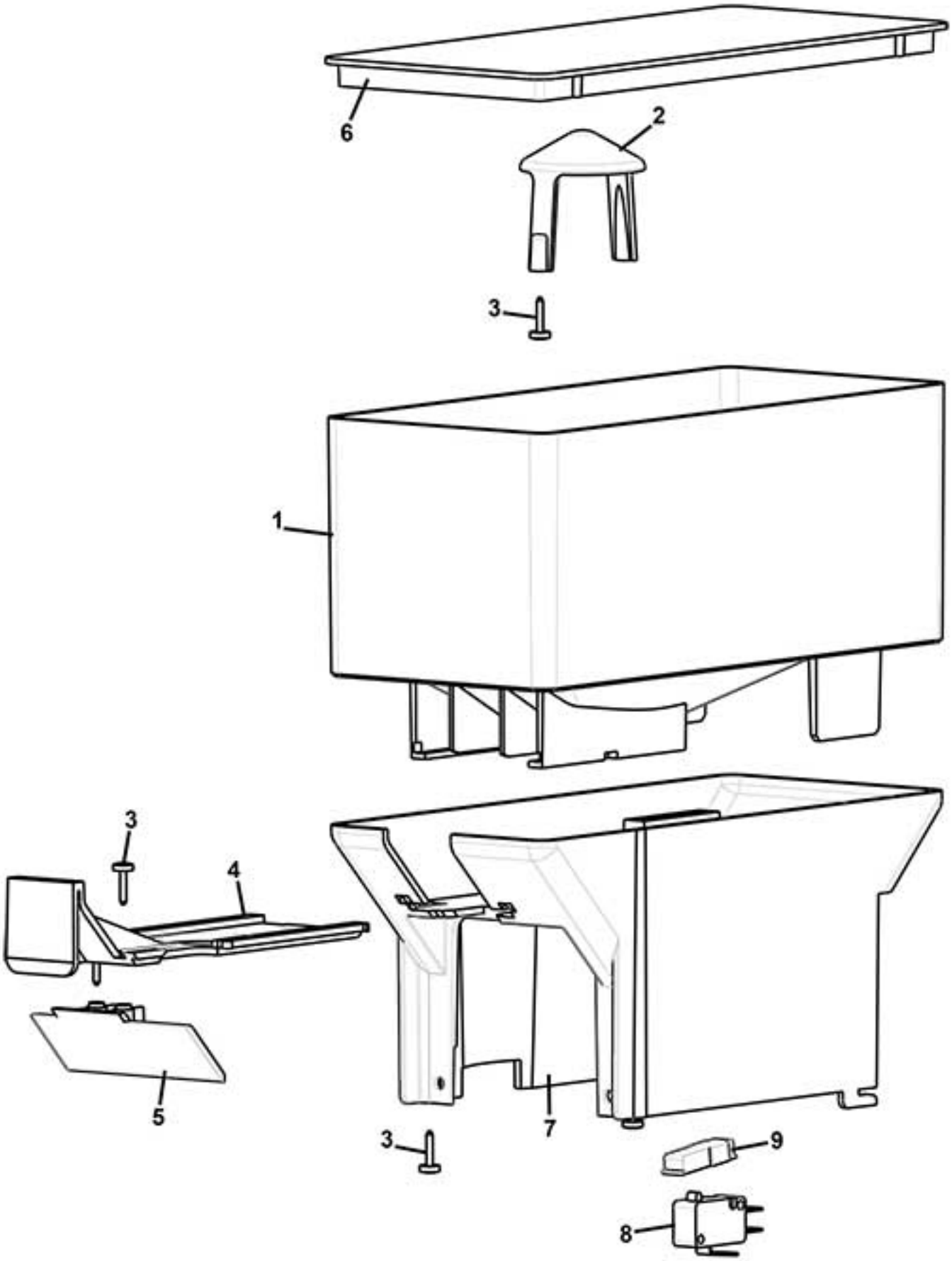

www.rheavendors.com tel: 0039 02 966 551 fax: 0039 02 96 55 086 email: rheavendors@rheavendors.com exclusive property of rheavendors group

coffee beans container		
Pos.	**Code**	**Description**
1	Z0230015302TR	COFFEE BEANS HOPPER
2	Z0230015227TR	GRINDER COVER
3	VIT0002469	SCREW HEAD TAP M3.5X10
4	Z0230015303-01IC	COFFEE BEANS HOP. STOP.RAL2011
5	Z0230015306NA	REGUL. GRINDER STOPPER PLATE
6	Z0230015305CK	COFFEE BEANS HOP. LIDRAL7037
7	Z0232300002	GRINDER COVER
8	ELE0001522CL	§ MICROSWITCH + LEVER + FASTON
9	Z0230015307NA	BUTTON BLACK
100	Z0230015300R1	COFFEE BEANS HOPPER From pos.1 to pos.6

www.rheavendors.com tel: 0039 02 966 551 fax: 0039 02 96 55 086 email: rheavendors@rheavendors.com exclusive property of rheavendors group

BRITA FILTER

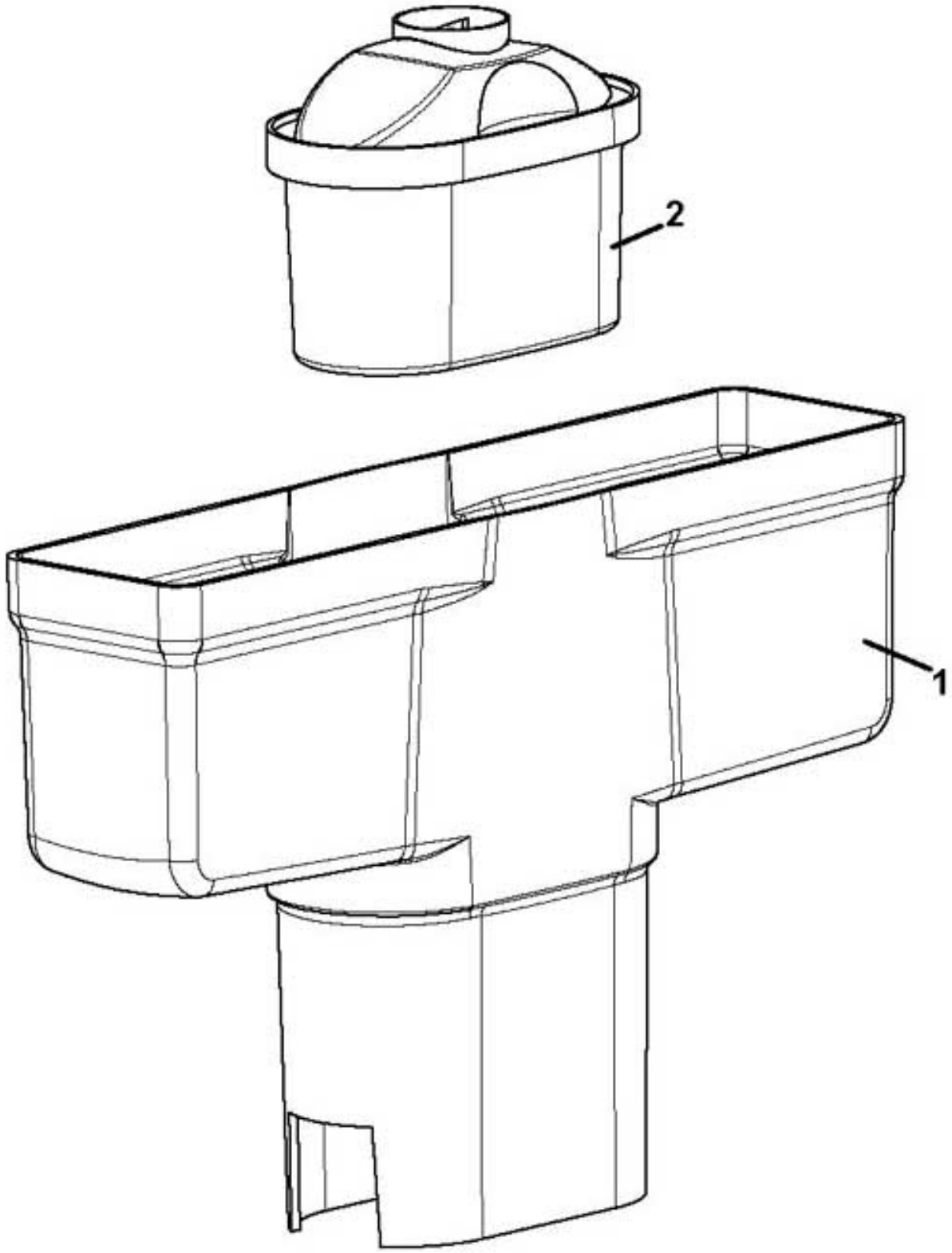

www.rheavendors.com tel: 0039 02 966 551 fax: 0039 02 96 55 086 email: rheavendors@rheavendors.com exclusive property of rheavendors group

BRITA FILTER		
Pos.	**Code**	**Description**
1	Z0800012522	BRITA MAXTRA 2020 FILTER SUPP.
2	Z0060001014	BRITA FILTER MAXTRA +
3	Z0800012513R1	ADAPTOR W/MAXT BRITA+FLTER KIT (Pos.1 + 2)

www.rheavendors.com tel: 0039 02 966 551 fax: 0039 02 96 55 086 email: rheavendors@rheavendors.com exclusive property of rheavendors group